EATON | Vickers

Hydrokraft Transmission Piston Pumps

Technical Catalog

TVW

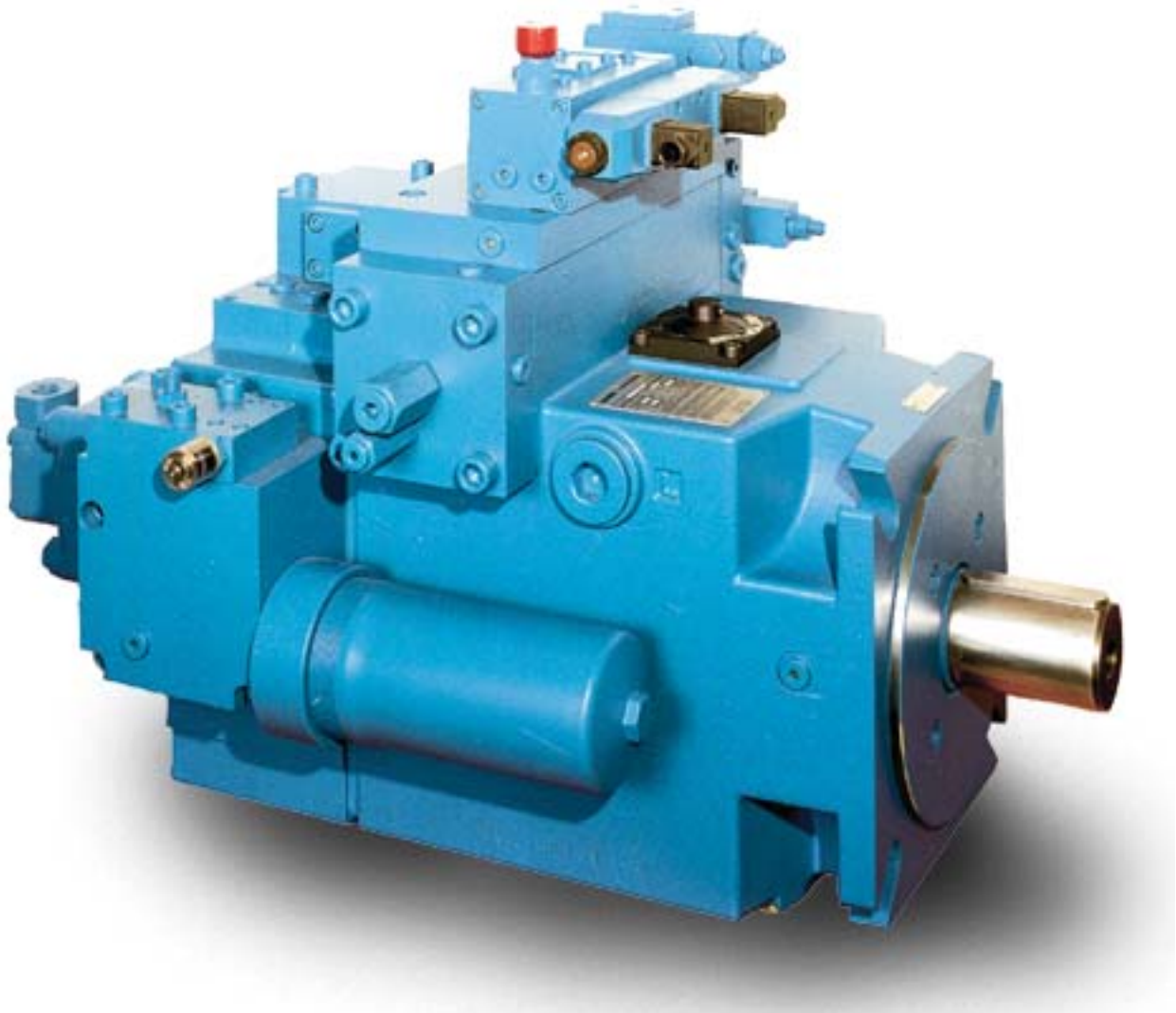

VICKERS®

Table of Contents

Introduction 4

Model Code

- Form Page 5
- Basic Pump 6
- ES Control 7
- DP Control. 8
- SP Control. 9
- SM Control. 10
- Special Features 11
- Combination Units. 12
- Examples for Combination units 13

Pump Specifications

- US 14
- Metric 15

Performance Curves

- 130 Series 16
- 180 Series 17
- 250 Series 18
- 360 Series 19
- 500 Series 20
- 750 Series 21

Hydraulic Transmission Circuit 22

- With Charge Flow Filter. 23
- Without Charge Flow Filter 24
- Combination of Two Pumps 25

Controls

- Electric Motor Displacement Control ES 26
- Controls for Position/Displacement DP, SP, SM. 27
- Pressure Signal Displacement Control DP. 28
- Example for TVW... - DP Control 29
- Proportional Valve Displacement Control SP 30
- Control Cards 31
- SP Control with Pressure and Power Limitation. 32
- Servo Adjustment Displacement Control with Mechanical Feedback SM 33

Table of Contents (cont.)

Pump Dimensions
- TVWS 130/180 34
- TVWS 250 35
- TVWS 360 36
- TVWS 500 37
- TVWS 750 38

Control Dimensions
- TVWS 250/360/500/750 ES Control 39
- TVWS 130/180 SP Control 40
- TVWS 250/360/500/750 SP Control 42
- TVWS 130/180 DP Control 44
- TVWS 250/360/500/750 DP Control 46
- TVWS 130/180 SM Control 48
- TVWS 250/360/500/750 SM Control 50
- TVWS Position of Center Gravity 52
- TVWS... Swash Angle/Flow Direction 53

Application Data 54
- Fluid Recommendations 55

Introduction

- Axial piston pumps with swash plate design for reliable operation and long life.
- Rotating and pressure loaded parts are pressure balanced.
- Wide range of available integrated charge and pilot pressure pump combinations for single and combination units.
- Special design for closed loop application.
- Oversize shaft and shaft bearings.
- Standard available transmission circuits with integrated valves and filters to build complete closed loop system. For charge flow and flushing.
- Through drive enable multiple pump installation from a single shaft. Multiple pump combinations are also available.
- Pressure up to 420 bar. Rated speed up to 1800 rpm. Higher speeds possible.
- Large charge flow rates for low system temperature.
- Fast response times.

AVAILABLE DISPLACEMENT SIZES
130 ccm
180 ccm
250 ccm
360 ccm
500 ccm
750 ccm

Displacement controls:

ES - Electric motor displacement control

HG - Handwheel displacement control (Special feature)

FE - Screw adjustment control (Special feature)

SP, SM - Displacement proportional to electric signal

DP - Displacement proportional to pressure signal

Extra functions available for SP, SM & DP: Pressure Limitation and/or power control overriding function.

Typical Section of Transmission Pump

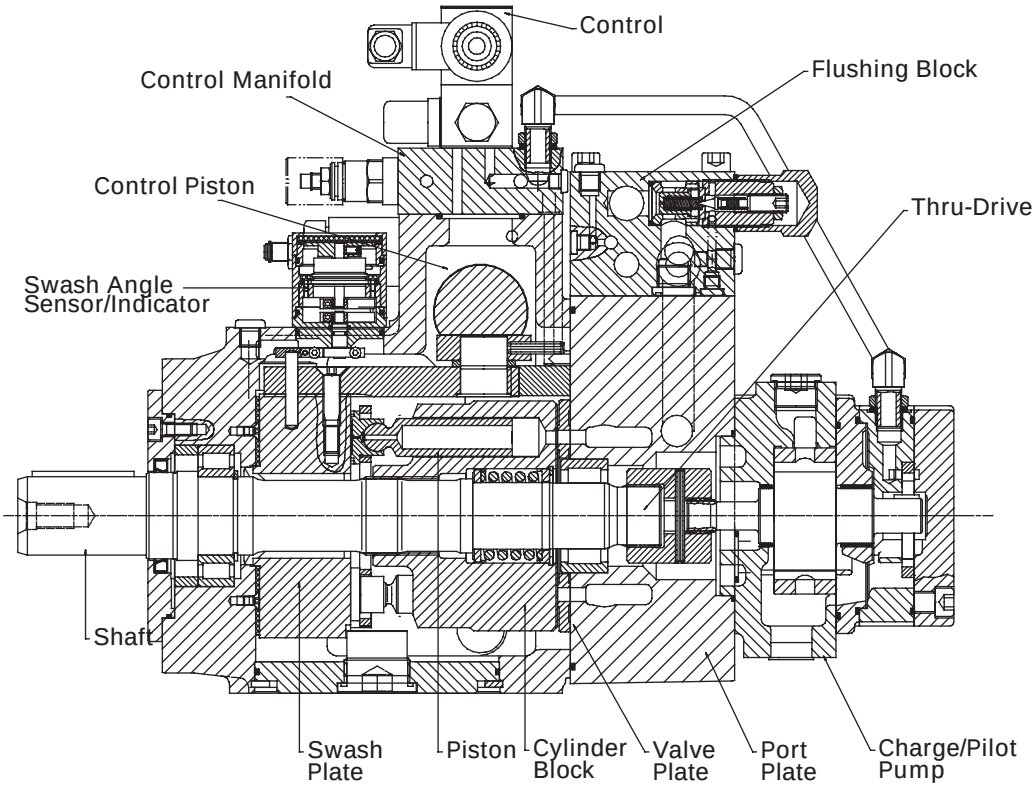

Dimensional information listed in this catalog is subject to change without notice.

Model Code

Transmission Pumps

"W" Series

Form Page

The following 55-digit coding system has been developed to identify all of the configuration options for the "W" Series Transmission (Closed Loop) pumps. Use this model code to specify a unit with the desired features. All 55-digits must be present when ordering. You may want to photocopy the matrix below to ensure, that each number is entered in the correct box. If adjustments other than the standard settings (character 47...50) or special features (character 51...53) are needed, please provide the information when ordering. At the end of this section you may need to provide an additional model code if a combination unit is needed. In case of a combination unit, each single pump section must be specified separately using this or other Eaton catalog information.

In the model code string below some characters are already filled out and shown on this and the following pages. For such characters there is no option available.

Explanation for each character can be found as follows:

	CHARACTER	PAGE
Basic Pump Model Code	1.....27	6
Control Options	28.....46	7 - 10
Customer Adjustment Specification	47.....50	7 - 10
Special Features	51.....53	11
Design Number	54.....55	11
Combination Model Code	1..... 39	12

1	2	3	4	5	6	7	8	9	10	11	12	13	14	15	16	17	18	19	20	21	22	23	24	25	26	27
T	V	W		–				M									1	R			S	V				

28	29	30	31	32	33	34	35	36	37	38	39	40	41	42	43	44	45	46	47	48	49	50	51	52	53	54	55
																										1	0

SPECIFY NON STANDARD ADJUSTMENT BELOW

SPECIFY SPECIAL FEATURE BELOW

Model Code

Transmission Pumps

"W" Series - Basic Pump

T	V	W	*	—	*	*	*	M	*	*	*	*	*	*	*	*	1	R	*	*	S	V	*	*	*	*	#
1	2	3	4	5	6	7	8	9	10	11	12	13	14	15	16	17	18	19	20	21	22	23	24	25	26	27	28

1 Pump

T – Transmission Pump

2 Displacement

V – Variable displacement

3 Pump Series

W – "W" Series (was 30 design)

4 Configuration

S – Single Unit
F – Front Unit
M – Middle Unit
R – Rear Unit

5 Separator

– – Separator

6 7 8 Displacement Size

130 – 130 cm^3/r [7.9 in^3/rev]
180 – 180 cm^3/r [11.0 in^3/rev]
250 – 250 cm^3/r [15.3 in^3/rev]
360 – 360 cm^3/r [22.0 in^3/rev]
500 – 500 cm^3/r [30.5 in^3/rev]
750 – 750 cm^3/r [45.8 in^3/rev]

9 Basic standard

M – Metric

10 11 Mounting flange

05 – ISO 3019/2 - 160B4HW (130 and 180 cm^3/r)
07 – ISO 3019/2 - 200B4HW (250 and 360 cm^3/r)
08 – ISO 3019/2 - 250B4HW (500 and 750 cm^3/r)

12 Rotation Direction

R – Right hand [CW]
L – Left hand [CCW]

13 Adjustment stop

0 – No adjustment stop
4 – Fixed mechanical Adjustment stop side A
5 – Fixed mechanical Adjustment stop side B
6 – Fixed mechanical Adjustment stop side A and B

14 15 16 17 Thru-Drive Options

0000 – None
000A – SAE A
000B – SAE B
000C – SAE C
000D – ISO 3019/2 - 125A2HW
000E – ISO 3019/2 - 160A2HW
000F – ISO 3019/2 - 125B4HW
000G – ISO 3019/2 - 160B4HW
000H – ISO 3019/2 - 200B4HW
000J – ISO 3019/2 - 250B4HW
000P – Pilot pump (8 cm^3/r)
000T – Charge pump (~25% of unit displacement size)
00TP – Charge pump (~25% of unit displacement size) and Pilot pump (8 cm^3/r)
00PP – Double pilot pump (8 cm^3/r + 8 cm^3/r)

18 Main Ports

1 – SAE Port - Metric bolts

19 Main Port Orientation

R – Radial (side ports)

20 21 Main Drive Shaft End

01 – ISO straight key
02 – ISO spline

22 Drive Shaft Seal Configuration

S – Single shaft seal

23 Seal Material

V – Viton*
* Viton is a trademark of E.I. Dupont (other materials available, contact your Eaton Representative)

24 Yoke Position Indicator

0 – No position indicator
V – Visual position indicator
P – Position sensor
L – Position limit switch
M – Position sensor and visual indicator

25 Housing surface finish

A – Blue painted

26 Transmission Circuit

0 – No transmission circuit
1 – Block filter, optical dirt indicator
2 – Block, filter, electrical dirt indicator
3 – Block without filter

27 Zero Position Valve

0 – No Zero Position Valve

28 Add Control Model Code

Code (characters 28...50) on the following pages

Model Code

Transmission Pumps

"W" Series - ES Control

E	S	*	0	0	*	0	0	0	0	0	0	0	0	0	0	*	*	*	*	*	*	*	#
28	29	30	31	32	33	34	35	36	37	38	39	40	41	42	43	44	45	46	47	48	49	50	51

28 29 Control type

ES – Electric motor displacement control

30 Displacement Adjustment Options

M – Electric Motor - Fast response
N – Electric Motor - Medium response
P – Electric Motor - Slow response

31 32 Electronic Controls

00 – Not required

33 Yoke Displacement Zone

A – Single side of center "A"
C – Over center

34 Extra Functions

0 – Not available

35 Pressure Control Options

0 – Not available

36 37 38 39 40 41 Power Control Options

000000 – Not required

42 Pilot Oil Filter

0 – Not required

43 Fail Safe Valve

0 – Not required

44 Position Monitoring

A – 4 limit switches
B – 8 limit switches
P – 4 limit switches + sensor
T – 8 limit switches + sensor

45 Electric Motor Type

2 – Motor with brake (IP54)
3 – Motor without brake (Explosion proof)

46 Control Voltage of Zero Position Valve and Directional Control Valve

0 – Not applicable
B – 110 AC 50 Hz/120 AC 60 Hz
D – 220 AC 50 Hz/240 AC 60 Hz
G – 12 VDC
H – 24 VDC

47 48 49 50 Customer Adjustment Specification

0000 – None

???? – Yes (final number will be assigned by Eaton. Specify on table below)

51 Special Features - Add special feature description (characters 51..55) on page 11 if required.

Response Time (sec) for Zero to Max. Displacement

SIZE	130		180		250		360		500		750	
Frequency	**50 Hz**	**60 Hz**	**50 Hz**	**60 Hz**	**50 Hz**	**60 Hz**	**50 Hz**	**60 Hz**	**50 Hz**	**60 Hz**	**50 Hz**	**60 Hz**
Fast	10	8	10	8	8	7	11	9	10	8	14	12
Medium	20	17	20	17	20	17	27	23	24	20	35	29
Slow	50	42	50	42	40	33	55	46	48	40	70	58

CUSTOMER ADJUSTMENT SPECIFICATIONS	UNIT	STANDARD SETTING	CUSTOMER ADJUSTMENT OPTION	REMARKS
All Revolution Adjustments below set at ...	rpm	1500	–	
Pressure Relief Valve Side A	bar	350		
Pressure Relief Valve Side B	bar	350		
Charge Pressure Relief Valve	bar	20	–	
Flushing (Low) Pressure Relief Valve	bar	10	–	
Mechanical Adjustment Stop Side A	L/min	Q_{max}		
Mechanical Adjustment Stop Side B	L/min	Q_{min}		
Displacement Adjusted to ...	L/min	-50% Q_{max} Side A		
Position Monitoring Switch 1	L/min	0 from A		
Position Monitoring Switch 2	L/min	95% Q_{max} Side A		> 95% not possible
Position Monitoring Switch 3	L/min	0 from B		
Position Monitoring Switch 4	L/min	95% Q_{max} Side B		> 95% not possible
Position Monitoring Switch 5	L/min	–		
Position Monitoring Switch 6	L/min	–		
Position Monitoring Switch 7	L/min	–		
Position Monitoring Switch 8	L/min	–		

Model Code

Transmission Pumps

"W" Series - DP Control

D	P	*	0	0	*	*	*	*	*	*	*	*	*	*	0	0	0	*	*	*	*	*	#
28	29	30	31	32	33	34	35	36	37	38	39	40	41	42	43	44	45	46	47	48	49	50	51

28 29 Control type

DP – Pressure signal displacement control

30 Displacement Adjustment Options

G – Mounting interface Cetop 3 only
H – Remote port G 1/4
J – Proportional relief inc. electronics
K – Proportional relief inc. electr. & dir. control

31 32 Electronic Controls

00 – Not required

33 Yoke Displacement Zone

A – Single side of center "A"
C – Over center

34 Extra Functions

0 – Not required for this control type
1 – Pressure limiter overriding function side A
2 – Pressure limiter overriding function side B
3 – Pressure limiter overriding function side A and B
4 – Pressure limiter and power control overriding function side A
5 – Pressure limiter and power control overriding function side B
6 – Pressure limiter and power control overriding function side A and B
7 – Pressure limiter function side A and B power control function side A
8 – Pressure limiter function side A and B power control function side B

35 Pressure Control Options

0 – Not required for this control type
F – Remote port, only side A
G – Remote port, only side B
H – Remote port, only side A and B
A – Electro Proportional Relief Valve Side A
B – Electro Proportional Relief Valve Side B
K – Electro Proportional Relief Valve Side A and B

36 37 38 39 40 41 Power Control Options

000000– Not required for this control type
???000– ??? kW at 1500 RPM Side A
000???– ??? kW at 1500 RPM Side B

42 Pilot Oil Filter

0 – Not applicable
V – Filter with visual indicator
E – Filter with electrical indicator

43 Fail Safe Valve

0 – Not applicable

44 Position Monitoring

0 – No position monitoring

45 Electric Motor Type

0 – No electric motor

46 Control Voltage of Zero Position Valve and Directional Control Valve

0 – Not applicable
B – 110 AC 50 Hz/120 AC 60 Hz
D – 220 AC 50 Hz/240 AC 60 Hz
G – 12 VDC
H – 24 VDC

47 48 49 50 Customer Adjustment Specification

0000 – None

???? – Yes (final number will be assigned by Eaton. Specify on table below)

51 Special Features - Add special feature description (characters 51..55) on page 11 if required

CUSTOMER ADJUSTMENT SPECIFICATIONS	UNIT	STANDARD SETTING	CUSTOMER ADJUSTMENT OPTION	REMARKS
All Revolution Adjustments below set at ...	rpm	1500	–	–
Pressure Relief Valve Side A	bar	350		
Pressure Relief Valve Side B	bar	350		
Charge Pressure Relief Valve	bar	20	–	
Flushing (Low) Pressure Relief Valve	bar	10	–	
Pilot Pressure Size 130, 180, 250, 360	bar	60	–	
Pilot Pressure Size 500 &750	bar	80	–	
Mechanical Adjustment Stop Side A	L/min	Q_{max}		
Mechanical Adjustment Stop Side B	L/min	Q_{min}		
Max. Stop by Control Side A	L/min	95% Q_{max}		
Max. Stop by Control Side B	L/min	95% Q_{max}		
Pressure Override Side A	bar	90		
Pressure Override Side B	bar	90		

Model Code

Transmission Pumps

"W" Series - SP Control

S	P	*	*	*	*	*	*	*	*	*	*	*	*	*	*	0	0	*	*	*	*	*	#
28	29	30	31	32	33	34	35	36	37	38	39	40	41	42	43	44	45	46	47	48	49	50	51

28 29 Control type

SP – Proportional valve displacement control

30 Displacement Adjustment Options

C – With Cetop 3 valve KDG4V S
F – With Cetop 5 Proportional valve

31 32 Electronic Controls

03 – ER 9.3 - 10 (Cetop 3)
04 – ER 9.4 - 10 (Cetop 5)

33 Yoke Displacement Zone

A – Single side of center "A"
C – Over center

34 Extra Functions

0 – Not required for this control type
1 – Pressure limiter overriding function side A
2 – Pressure limiter overriding function side B
3 – Pressure limiter overriding function side A and B
4 – Pressure limiter and power control overriding function side A
5 – Pressure limiter and power control overriding function side B
6 – Pressure limiter and power control overriding function side A and B
7 – Pressure limiter function side A and B power control function side A
8 – Pressure limiter function side A and B power control function side B

35 Pressure Control Options

0 – Not required for this control type
F – Remote port, only side A
G – Remote port, only side B
H – Remote port, only side A and B
A – Electro Proportional Relief Valve Side A
B – Electro Proportional Relief Valve Side B
K – Electro Proportional Relief Valve Side A and B

36 37 38 39 40 41 Power Control Options

000000– Not required for this control type
???000– ??? kW at 1500 RPM Side A
000???– ??? kW at 1500 RPM Side B

42 Pilot Oil Filter

0 – Not applicable
V – Filter with visual indicator
E – Filter with electrical indicator

43 Fail Safe Valve

0 – Not applicable
1 – With solenoid valve

44 Position Monitoring

0 – No position monitoring

45 Electric Motor Type

0 – No electric motor

46 Control Voltage of Fail Safe Valve

0 – Not applicable
B – 110 AC 50 Hz/120 AC 60 Hz
D – 220 AC 50 Hz/240 AC 60 Hz
G – 12 VDC
H – 24 VDC

47 48 49 50 Customer Adjustment Specification

0000 – None

???? – Yes (final number will be assigned by Eaton. Specify on table below)

51 Special Features

Add special feature description (characters 51..55) on page 11 if required

CUSTOMER ADJUSTMENT SPECIFICATIONS	UNIT	STANDARD SETTING	CUSTOMER ADJUSTMENT OPTION	REMARKS
All Revolution Adjustments below set at ...	rpm	1500	–	–
Pressure Relief Valve Side A	bar	350		
Pressure Relief Valve Side B	bar	350		
Charge Pressure Relief Valve	bar	20	–	
Flushing (Low) Pressure Relief Valve	bar	10	–	
Pilot Pressure Size 130, 180, 250, 360	bar	60	–	
Pilot Pressure Size 500 &750	bar	80	–	
Mechanical Adjustment Stop Side A	L/min	Q_{max}		
Mechanical Adjustment Stop Side B	L/min	Q_{min}		
Max. Stop by Control Side A	L/min	95% Q_{max}		
Max. Stop by Control Side B	L/min	95% Q_{max}		
Ramp Time 0 _ A	sec	0	El. Card Adjustment Done by Customer	Refer to El. card manual
Ramp Time A _ 0	sec	0	El. Card Adjustment Done by Customer	Refer to El. card manual
Pressure Override Side A	bar	90		
Pressure Override Side B	bar	90		

Model Code

Transmission Pumps

"W" Series - SM Control

S	M	0	0	0	*	*	*	*	*	*	*	*	*	0	0	0	0	0	*	*	*	*	#
28	29	30	31	32	33	34	35	36	37	38	39	40	41	42	43	44	45	46	47	48	49	50	51

28 29 Pump

SM – El. servo displacement control - mechanical feedback

30 Displcement Adjustment Option

0 – Not required for this control type

31 32 Electronic Controls

00 – Not required for this control type

33 Yoke Displacement Zone

A – Single side of center "A"
C – Over center

34 Extra Functions

0 – Not required for this control type
1 – Pressure limiter overriding function side A
2 – Pressure limiter overriding function side B
3 – Pressure limiter overriding function side A and B
4 – Pressure limiter and power control overriding function side A
5 – Pressure limiter and power control overriding function side B
6 – Pressure limiter and power control overriding function side A and B
7 – Pressure limiter function side A and B power control function side A
8 – Pressure limiter function side A and B power control function side B

35 Pressure Control Options

0 – Not required for this control type
F – Remote port, only side A
G – Remote port, only side B
H – Remote port, only side A and B
A – Electro Prop. Relief Valve Side A
B – Electro Prop. Relief Valve Side B
K – Electro Prop. Relief Valve Side A and B

36 37 38 39 40 41 Power Control Option

000000 – Not required for this control type
???000 – ??? kW at 1500 RPM Side A
000??? – ??? kW at 1500 RPM Side B

42 Pilot Oil Filter

0 – Filter has to be installed by customer

43 Fail Safe Valve

0 – Not required for this control type

44 Position Monitoring

0 – Not required for this control type

45 Electric Motor Type

0 – Not required for this control type

46 Control Voltage of Zero Position Valve

0 – Not required for this control type

47 48 49 50 Customer Adjustment Specification

0000 – None

???? – Yes (final number will be assigned by Eaton. Specify on table below)

51 Special Features

Add special feature description (characters 51..55) on page 11 if required

CUSTOMER ADJUSTMENT SPECIFICATIONS	UNIT	STANDARD SETTING	CUSTOMER ADJUSTMENT OPTION	REMARKS
All Adjustment below set at ...	RPM	1500	-	
Pressure Relief Valve Side A	bar	350		
Pressure Relief Valve Side B	bar	350		
Charge Pressure Relief Valve	bar	20	-	
Flushing (low) Pressure Relief Valve	bar	10	-	
Pilot Pressure Size 130, 180, 250, 360	bar	60	-	
Pilot Pressure Size 500 and 750	bar	80	-	
Max. Mechanical Stop Side A	l/min	Qmax		
Max. Mechanical Stop Side B	l/min	Qmax		
Pressure Override Side A	bar	90		
Pressure Override Side B	bar	90		

Model Code

Transmission Pumps

"W" Series -
Special Features

*	*	*	1	0
51	52	53	54	55

51 52 53 **Special Features**

000 - None
******* - Defined by Eaton

54 55 **Design Number**

10 - Design Number

Model Code

Combination Units

*	*	*	C	—	*	*	*	*	*	*	*	*	*	*	*	*	*	*	*	*	*	*	*	*
1	2	3	4	5	6	7	8	9	10	11	12	13	14	15	16	17	18	19	20	21	22	23	24	25

H	C	8	1	*	*	*	*	*	*	*	*	*	*
26	27	28	29	30	31	32	33	34	35	36	37	38	39

1 Combination Unit

P – Pump
T – Transmission Pump
M – Motor

2 Displacement

F – Filled
V – Variable

3 Pump Series

W – "W" Series (was 30 design)
X – "X" Series (was 20 design)

4 Combination Unit

C

5 Separator

6 7 8 First Displacement cm3/r

066 – 66 cm³/r [4.0 in³/rev]
090 – 90 cm³/r [5.5 in³/rev]
130 – 130 cm³/r [7.9 in³/rev]
180 – 180 cm³/r [11.0 in³/rev]
250 – 250 cm³/r [15.3 in³/rev]
360 – 360 cm³/r [22.0 in³/rev]
500 – 500 cm³/r [30.5 in³/rev]
750 – 750 cm³/r [45.8 in³/rev]

9 10 First Control Type

00 – No Control (for Fixed Displacement Only)
DF – Pressure Compensator
LR – Power Control
ES – Electric Motor Control
HG – Handwheel Displacement Control
FE – Screw Adjustment Displacement Control
SM – Servo Adjustment Displacement Control - Mech Feedback
DP – Pressure Signal Displacement Control
SP – Proportional Valve Displacement Control

11 12 13 Second Displacement cm3/r

066 – 66 cm³/r [4.0 in³/rev]
090 – 90 cm³/r [5.5 in³/rev]
130 – 130 cm³/r [7.9 in³/rev]
180 – 180 cm³/r [11.0 in³/rev]
250 – 250 cm³/r [15.3 in³/rev]
360 – 360 cm³/r [22.0 in³/rev]
500 – 500 cm³/r [30.5 in³/rev]
750 – 750 cm³/r [45.8 in³/rev]

14 15 Second Control Type

00 – No Control (for Fixed Displacement Only)
DF – Pressure Compensator
LR – Power Control
ES – Electric Motor Control
HG – Handwheel Displacement Control
FE – Screw Adjustment Displacement Control
SM – Servo Adjustment Displacement Control - Mech Feedback
DP – Pressure Signal Displacement Control
SP – Proportional Valve Displacement Control

16 17 18 Third Displacement cm3/r

000 – Not Required
066 – 66 cm³/r [4.0 in³/rev]
090 – 90 cm³/r [5.5 in³/rev]
130 – 130 cm³/r [7.9 in³/rev]
180 – 180 cm³/r [11.0 in³/rev]
250 – 250 cm³/r [15.3 in³/rev]
360 – 360 cm³/r [22.0 in³/rev]
500 – 500 cm³/r [30.5 in³/rev]
750 – 750 cm³/r [45.8 in³/rev]

19 20 Third Control Type

00 – No Control (for Fixed Displacement Only)
DF – Pressure Compensator
LR – Power Control
ES – Electric Motor Control
HG – Handwheel Displacement Control
FE – Screw Adjustment Displacement Control
SM – Servo Adjustment Displacement Control - Mech Feedback
DP – Pressure Signal Displacement Control
SP – Proportional Valve Displacement Control

21 22 23 Fourth Displacement cm³/r

000 – Not Required
066 – 66 cm³/r [4.0 in³/rev]
090 – 90 cm³/r [5.5 in³/rev]
130 – 130 cm³/r [7.9 in³/rev]
180 – 180 cm³/r [11.0 in³/rev]
250 – 250 cm³/r [15.3 in³/rev]
360 – 360 cm³/r [22.0 in³/rev]
500 – 500 cm³/r [30.5 in³/rev]
750 – 750 cm³/r [45.8 in³/rev]

24 25 Fourth Control Type

00 – No Control (for Fixed Displacement Only)
DF – Pressure Compensator
LR – Power Control
ES – Electric Motor Control
HG – Handwheel Displacement Control
FE – Screw Adjustment Displacement Control
SM – Servo Adjustment Displacement Control - Mech Feedback
DP – Pressure Signal Displacement Control
SP – Proportional Valve Displacement Control

26 27 28 29 Assembly Numbers

HC81 – Defined By Eaton

30 31 32 33 34 35 36 37 38 39 Assembly Numbers

Defined By Eaton

- For a combination of two or more units fill out this Combination Model Code.
- Start with the biggest size unit for the first displacement.
- For each unit included in this combination, a separate model code must be chosen. Use the form on page 5.
- Character 26 to 39 will be P/N of the combination. This number will be defined by Eaton and provided in the order acknowledgement.
- Charge and Pilot Pump through drive option must be specified on the rear unit of the combination (as a special feature).
- Front and middle units shall have the through drive option of the following unit in the combination.

Example 1: Combination of two closed loop pumps

Model Code Front Unit	TVWF-500M08R0000H1R02SVMA20SPC03C00000000E100H000000010
Model Code Rear Unit	TVWR-250M07R000PP1R02SVMA20SPC03C00000000E100H000000010
Model Code Combination Unit	TVWC-500SP250SP0000000000HC81**********

Example 2: Combination of one closed loop - and two open loop pumps (For open loop model code refer to the according catalog)

Mode Code Front Unit	TVWF-500M08R0000H1R02SVMA20SPC03C00000000E100H000000010
Model Code Middle Unit	PVWM-250M07R00E1R02SV0ADF000A0000000000000000010
Model Code Rear Unit	PFXR-130M02R00P1A02SV0A00000A0000000000000000010
Model Code Combination Unit	TVWC-500SP250DF1300000000HC81**********

Pump Specifications - US

MODEL			TVW 130	TVW 180	TVW 250	TVW 360	TVW 500	TVW 750
Design			Swash plate - Axial piston pump					
Type of mounting			Flange or foot-mounted. Combination units foot mounted only					
Pipe connection SAE/Flange	B A	psi	1-1/4"-6000	1-1/4"-6000	1-1/2"-6000	1-1/2"-6000	2"-6000	2"-6000
Direction of rotation			Clockwise when viewing shaft end of pump Counterclockwise available on request					
Speed range	n_{min} n_{max}	rpm	150 1800					 1500[1)]
Installation position			Optional, see mounting information					
Ambient temperature range	min max	°F	-4 122					
Weight	m	lb	353	364	518	529	926	1014
Mass of inertia	J	lb ft^2	1.07	1.07	3.46	3.61	11.9	13.1

HYDRAULIC CHARACTERISTICS								
Nominal pressure (100% duty cycle)	p_N	psi	5075					
Input pressure	p_{1min} p_{1max}	psi psi	58 abs Pressure can be applied to the pump inlet but the sum of p1 and p2 must not exceed the maximum value of 6090 psi					
Max. pressure to DIN 24312	p_{2max}	psi	6090					
Hydraulic fluid			Hydraulic oil to DIN 51524 part 2. Refer to section Application Data-Fluid Recommendations					
Hydraulic fluid temperature range	min max	°F	-13 194					
Viscosity range for continuous operation	min max	cSt cSt	10 150					
Max. permissible start viscosity	max	cSt	1000[2)]					
Filtering	ISO 4406		18/15/13					
Maximum geometric displacement	V_g	in^3	7.9	11	15.2	22	30.5	45.7
Max. geom. pump flow n= 1500 rpm n= 1800 rpm	Q_g	USgpm	51.5 62	71 85.5	99 119	142 171	198 238	297 297[1]
Case pressure	$p_{v\,max}$	psi	max. 7.2 psi over p1. pmax = 58 psi abs.					

HYDRAULIC CHARACTERISTIC OF CHARGE AND PILOT PUMP								
Displacement charge pump	$V_{g\,Sp}$	in^3	2.44	2.44	3.91	4.88	7.63	12.2
Charge pressure	$p_{N\,Sp}$	psi	145/290	145/290	145/290	145/290	174/290	232/348
Input pressure charge & pilot pump	$p_{min\,Sp/St}$	psi	11.6 absolute					
Displacement pilot pump	$V_{g\,St}$	in^3	0.5					
Pilot pressure	p_{St}	psi	870	870	870	870	1160	1160

DRIVE								
Max. driving torque - single unit (p2 max., h= 100%)	$M_{1\,Single}$	lb.ft.	642	888	1232	1774	2463	3688
Max. power consumption - single unit (p2 max., h= 100%; n= 1800 rpm)	$P_{1\,Single}$	hp	220	304	422	608	845	1055[1]
Max. driving torque - comb. unit	$M_{1\,Comb.}$	lb.ft.	2x642	2x888	2x1232	2x1774	3688	3688

1) TVW - 750 at 1800 rpm reduced to 38.1 in^3

2) When pressure below 1450 psi and flow below 25% of max. flow

Pump Specifications - Metric

MODEL			TVW 130	TVW 180	TVW 250	TVW 360	TVW 500	TVW 750
Design			Swash plate - Axial piston pump					
Type of mounting			Flange or foot-mounted. Combination units foot mounted only					
Pipe connection SAE/Flange	B A	psi	1-1/4"-6000	1-1/4"-6000	1-1/2"-6000	1-1/2"-6000	2"-6000	2"-6000
Direction of rotation			Clockwise when viewing shaft end of pump Counterclockwise available on request					
Speed range	n_{min} n_{max}	min^{-1}	150 1800					1500[1)]
Installation position			Optional, see mounting information					
Ambient temperature range	min max	°C	-20 50					
Weight	m	kg	160	165	235	240	420	460
Mass of inertia	J	$kg\ m^2$	0,045	0,045	0,146	0,152	0,5	0,55

HYDRAULIC CHARACTERISTICS								
Nominal pressure (100% duty cycle)	p_N	bar	350					
Input pressure	p_{1min} p_{1max}	bar bar	4 Pressure can be applied to the pump inlet but the sum of p1 and p2 must not exceed the maximum value of 420 bar					
Max. pressure to DIN 24312	p_{2max}	psi	420					
Hydraulic fluid			Hydraulic oil to DIN 51524 part 2. Refer to section Application Data-Fluid Recommendations					
Hydraulic fluid temperature range	min max	°C	-25 90					
Viscosity range for continuous operation	min max	cSt cSt	10 150					
Max. permissible start viscosity	max	cSt	1000[2)]					
Filtering	ISO 4406		18/15/13					
Maximum geometric displacement	V_g	cm^3	130	180	250	360	500	750
Max. geom. pump flow n= 1500 min^{-1} n= 1800 min^{-1}	Q_g	l/min	195 234	270 324	375 450	540 648	750 900	1125 1125[1]
Case pressure	$p_{v\ max}$	bar	max. 0,5 bar over p1. pmax = 4 bar abs.					

HYDRAULIC CHARACTERISTIC OF CHARGE AND PILOT PUMP								
Displacement charge pump	$V_{g\ Sp}$	cm^3	40	40	64	80	125	200
Charge pressure	$p_{N\ Sp}$	bar	10/20	10/20	10/20	10/20	12/20	16/24
Input pressure charge & pilot pump	$p_{min\ Sp/St}$	bar	0,8 absolute					
Displacement pilot pump	$V_{g\ St}$	cm^3	8					
Pilot pressure	p_{St}	bar	60	60	60	60	80	80

DRIVE								
Max. driving torque - single unit (p2 max., h= 100%)	$M_{1\ Single}$	Nm	870	1204	1670	2405	3340	5000
Max. power consumption - single unit (p2 max., h= 100%; n= 1800 min^{-1})	$P_{1\ Single}$	kW	164	227	315	454	630	787[1]
Max. driving torque - comb. unit	$M_{1\ Comb.}$	Nm	2x870	2x1204	2x1670	2x2405	5000	5000

1) TVW - 750 at 1800 min^{-1} reduced to 625cm^3

2) When pressure below 100 bar and flow below 25% of max. flow

Performance Curves - 130 Series

Power efficiency performance curve

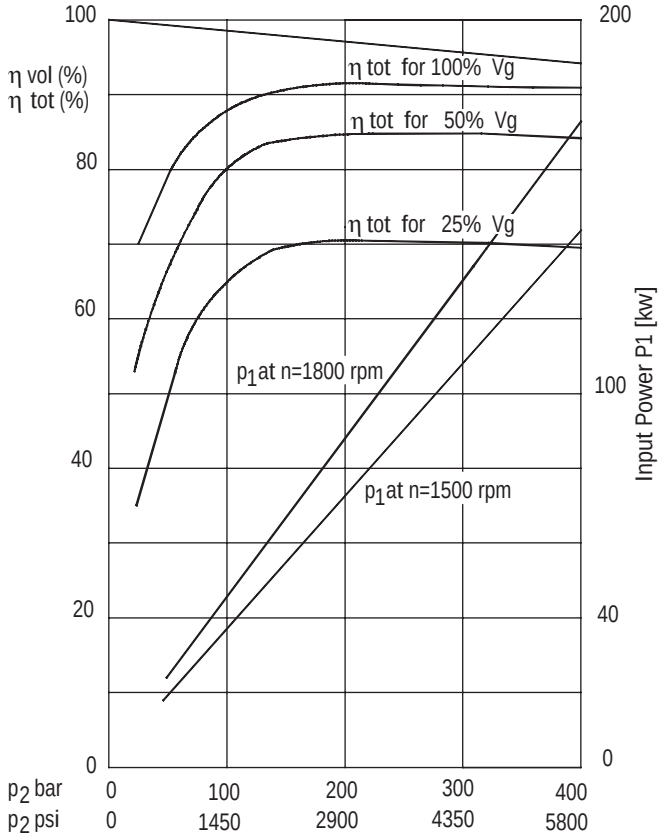

Roller bearing life

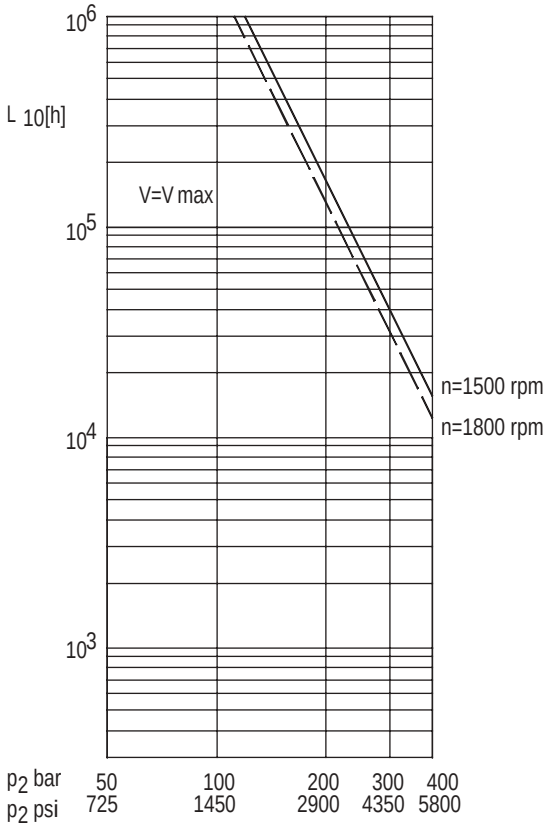

Combination units

For combination pumps the characteristic values are as for the individual units.

For reduced swash-angle:

$$L_h = (L \text{ at } V_{max}) \times \frac{1}{\left(\frac{V}{V_{max}}\right)^{\frac{10}{3}}}$$

Performance Curves - 180 Series

Power efficiency performance curve

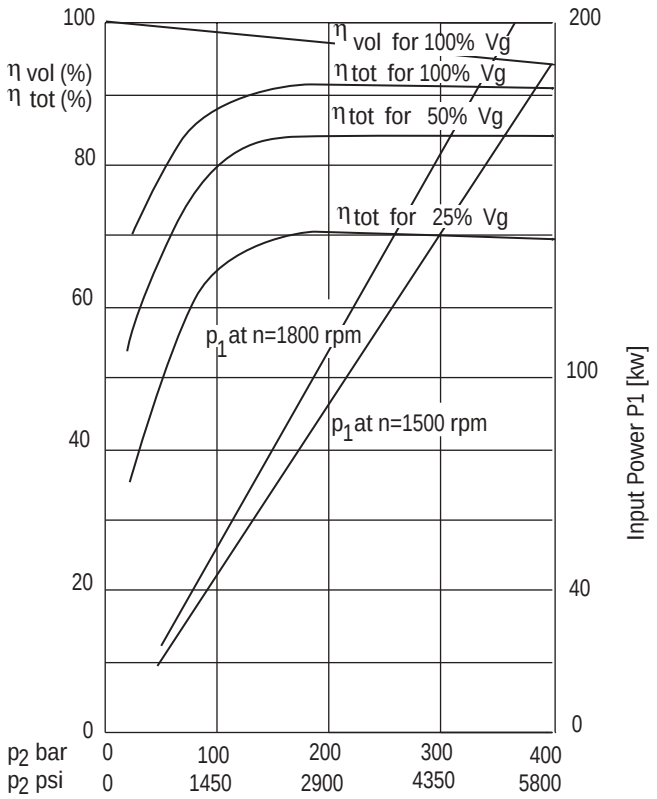

Roller bearing life

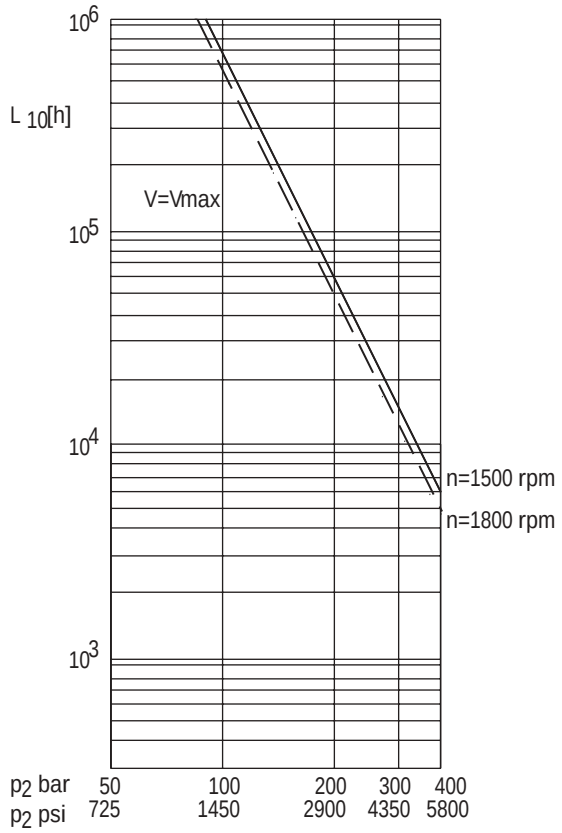

Combination units

For combination pumps the characteristic values are as for the individual units.

For reduced swash-angle:

$$L_h = (L \text{ at } V_{max}) \times \frac{1}{\left(\frac{V}{V_{max}}\right)^{\frac{10}{3}}}$$

Performance Curves - 250 Series

Power efficiency performance curve

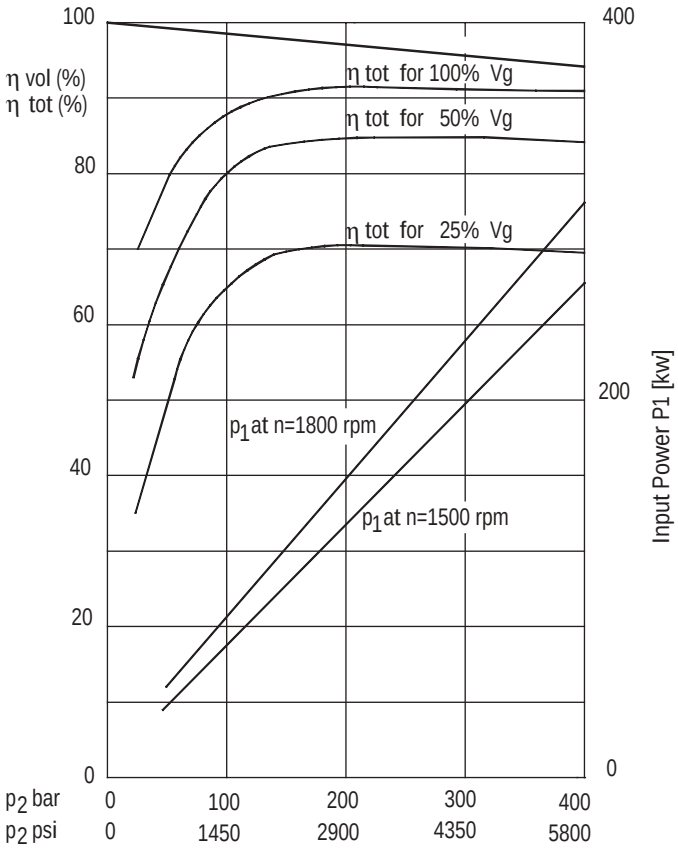

Roller bearing life

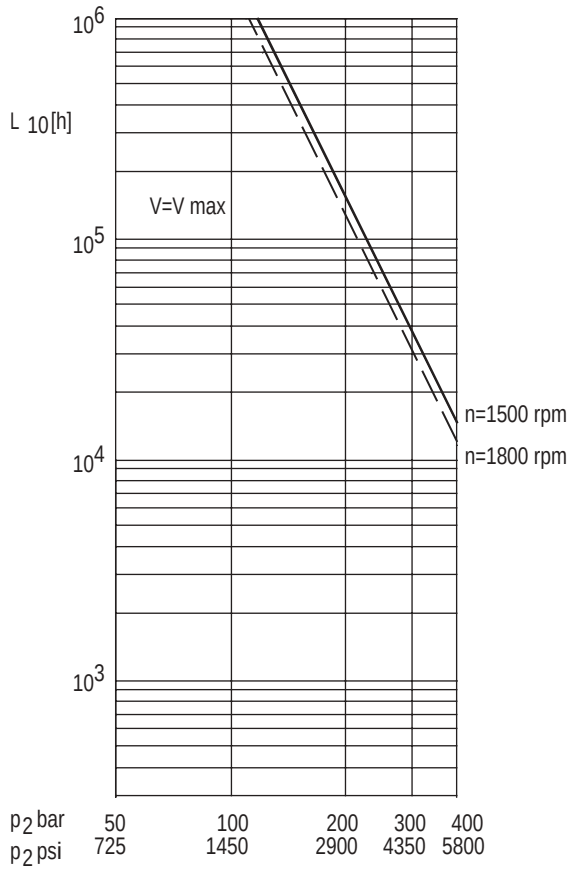

Combination units

For combination pumps the characteristic values are as for the individual units.

For reduced swash-angle:

$$L_h = (L \text{ at } V_{max}) \times \frac{1}{\left(\frac{V}{V_{max}}\right)^{\frac{10}{3}}}$$

Performance Curves - 360 Series

Power efficiency performance curve

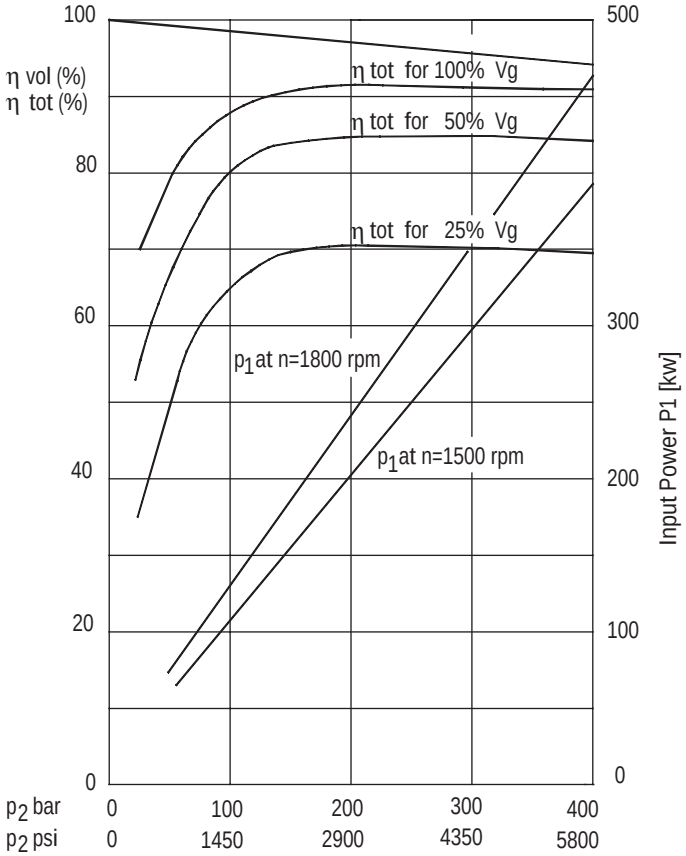

Roller bearing life

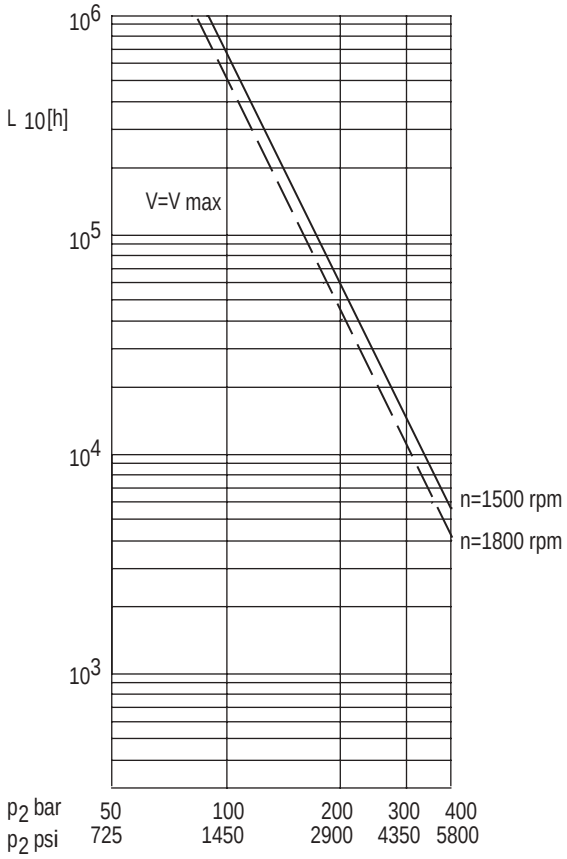

Combination units

For combination pumps the characteristic values are as for the individual units.

For reduced swash-angle:

$$L_h = (L \text{ at } V_{max}) \times \frac{1}{\left(\frac{V}{V_{max}}\right)^{\frac{10}{3}}}$$

Performance Curves - 500 Series

Power efficiency performance curve

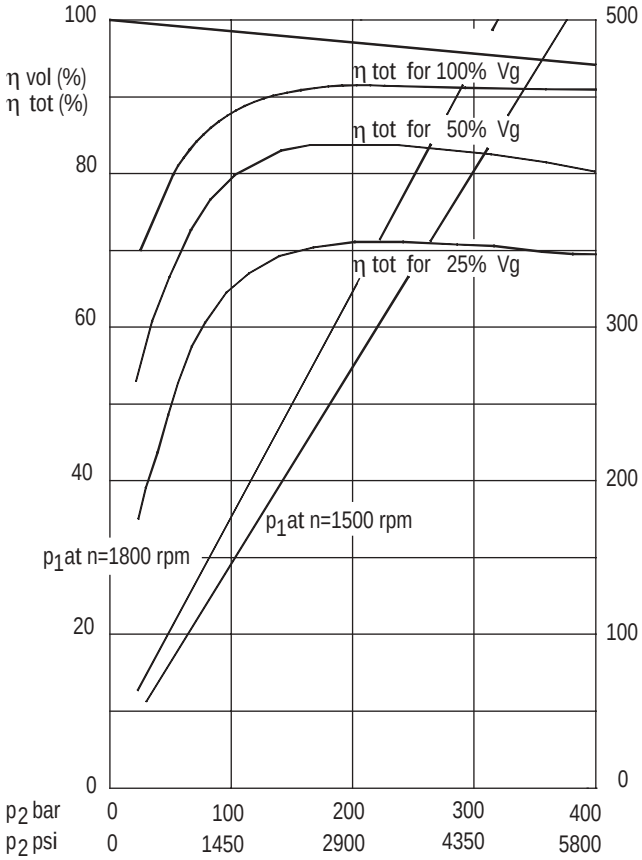

Roller bearing life

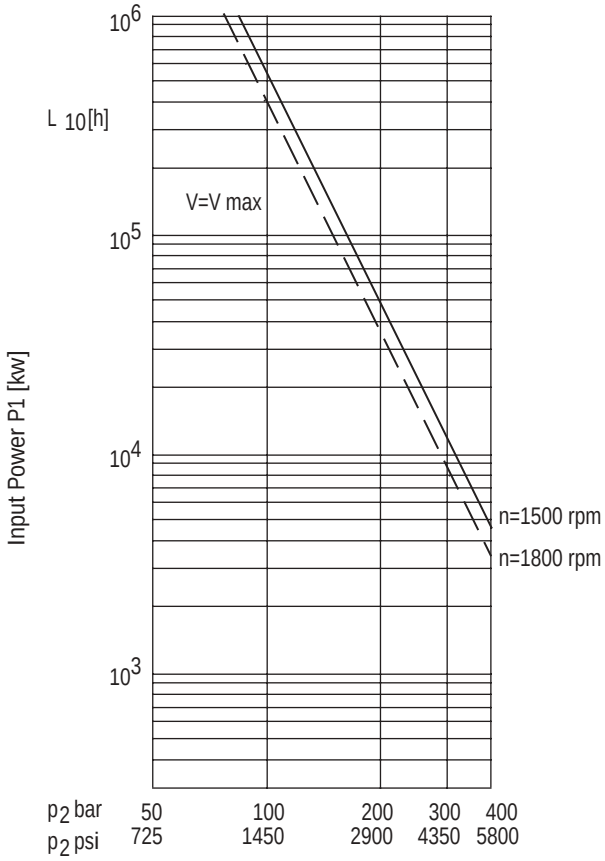

Combination units

For combination pumps the characteristic values are as for the individual units. Only the torque M_1 is limited to 5000 Nm.

For reduced swash-angle:

$$L_h = (L \text{ at } V_{max}) \times \frac{1}{\left(\frac{V}{V_{max}}\right)^{\frac{10}{3}}}$$

Performance Curves - 750 Series

Power efficiency performance curve

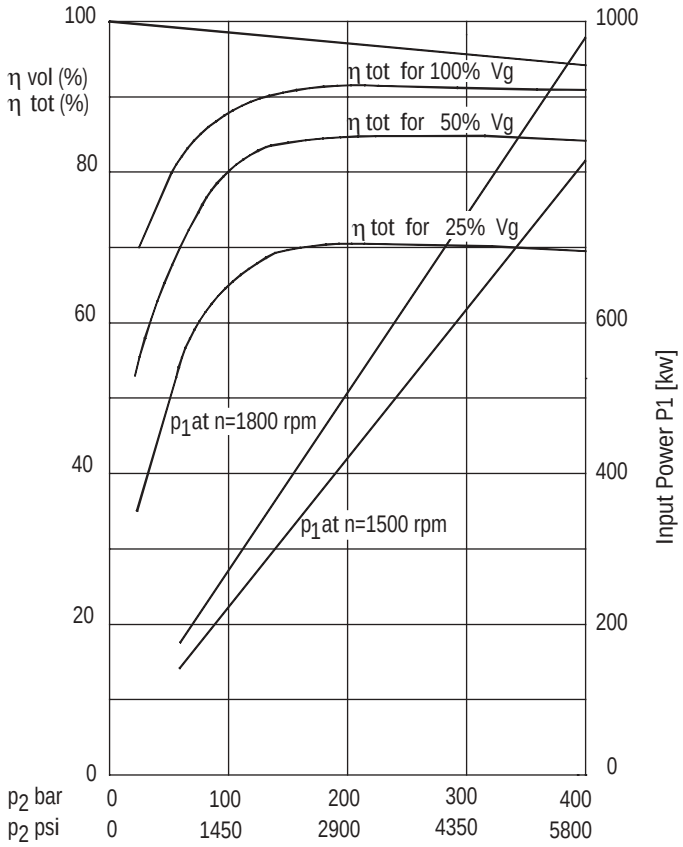

Roller bearing life

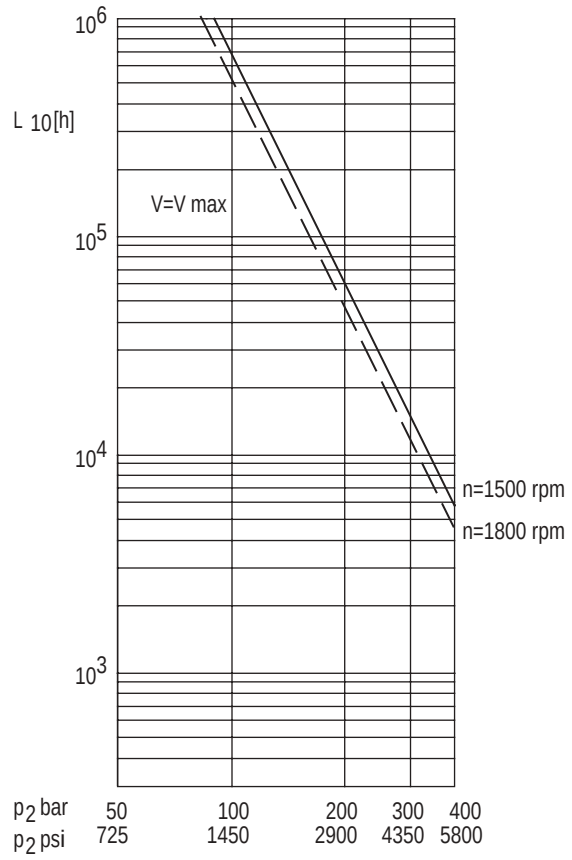

For reduced swash-angle:

$$L_h = (L \text{ at } V_{max}) \times \frac{1}{\left(\frac{V}{V_{max}}\right)^{\frac{10}{3}}}$$

Hydraulic Transmission Circuit

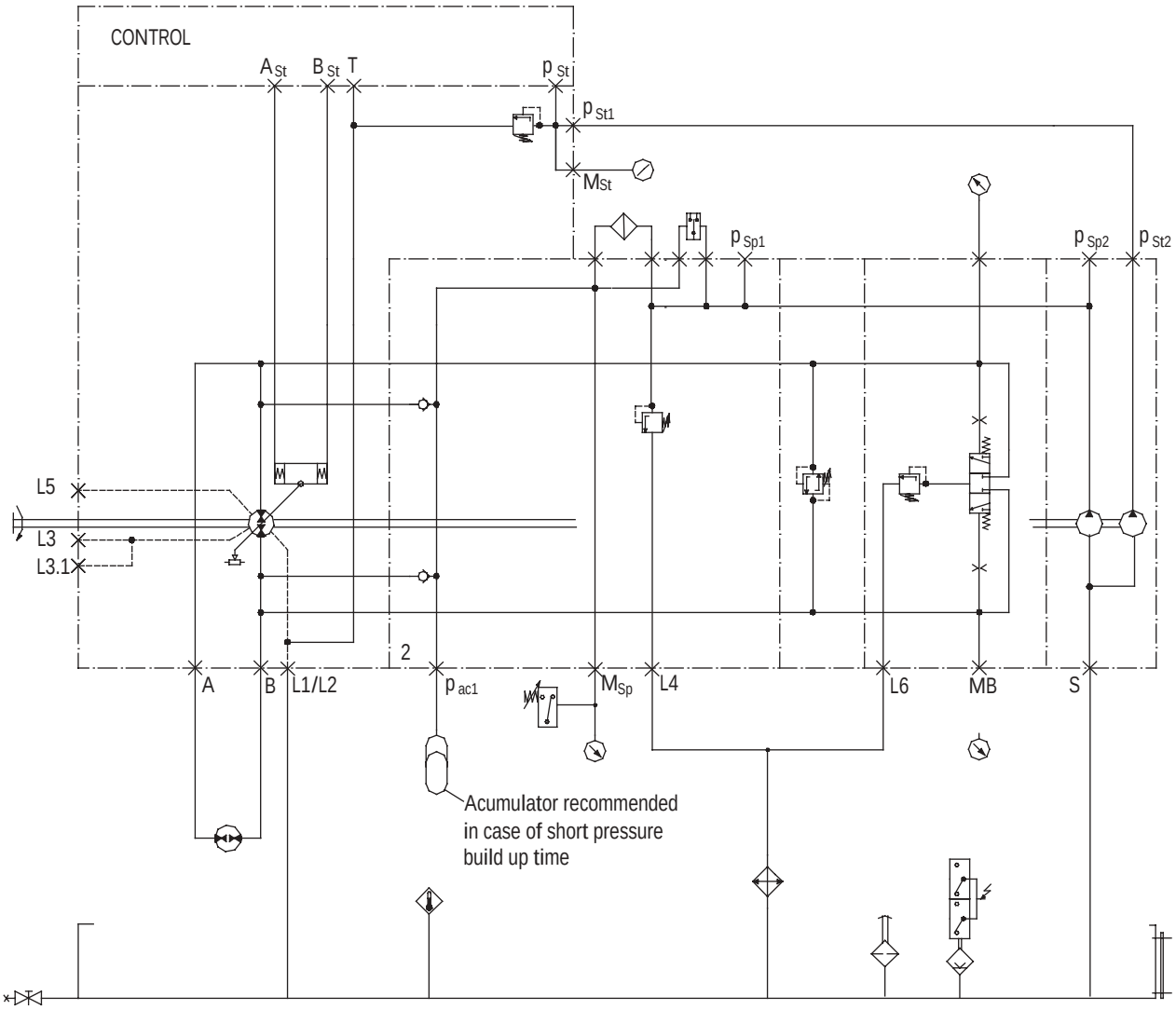

A, B	System port	L4	Return line charge flow	M_{Sp}	Gauge port charge pressure	p_{St2}	Pilot pump outlet port
A_{St}, B_{St}	Control	L5	Oil filling plug	M_{St}	Gauge port pilot pressure	S	Suction port for charge and pilot pump
L1, L2	Drain port	L6	Return line charge flow	p_{ac1}	Accumulator port	T	Tank port
L3	Ventilation port for vertical mounting	MA, MB	Gauge port system pressure	p_{Sp1}, p_{Sp2}	Port for external charge flow		
L3.1	Air bleeding port for vertical mounting			p_{St1}	Port for pilot flow		
				p_{St}	Port for pilot flow to control		

Hydraulic Transmission Circuit

with Charge Flow Filter

Size 130 ..... 500.
(Not available for 750)

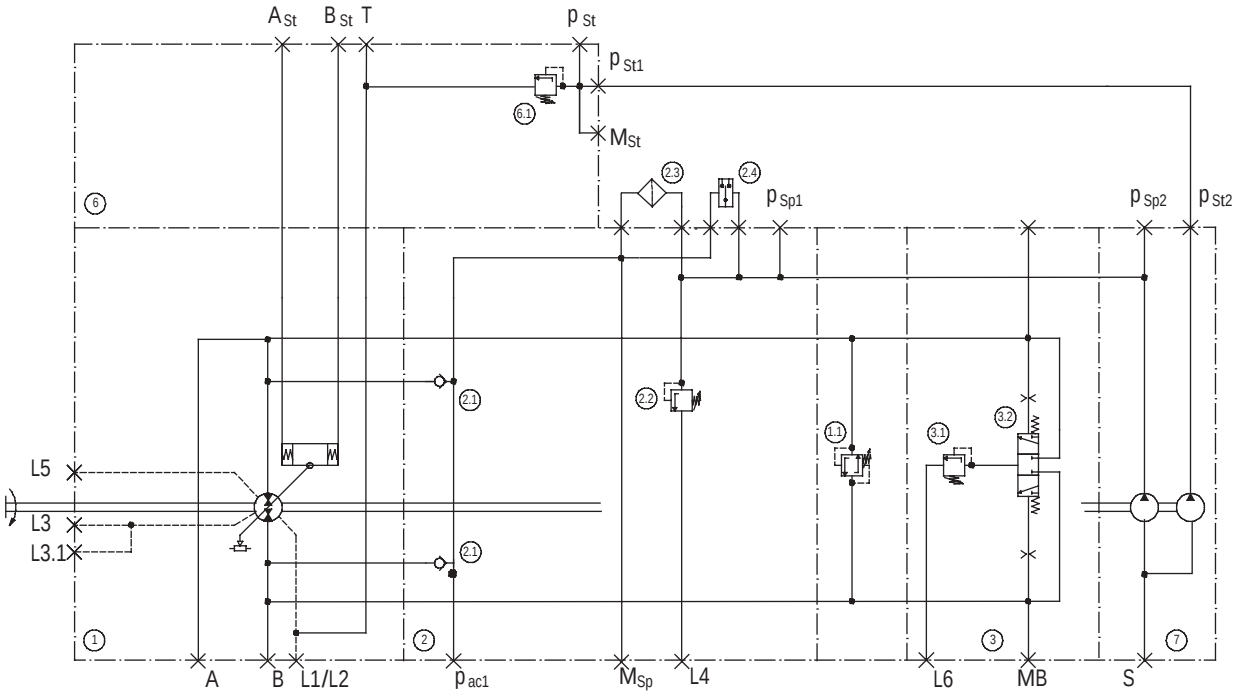

A, B	System port
A_{St}, B_{St}	Control
L1, L2	Drain port
L3	Ventilation port for vertical mounting
L3.1	Air bleeding port for vertical mounting
L4	Return line charge flow
L5	Oil filling plug
L6	Return line charge flow
MA, MB	Gauge port system pressure
M_{Sp}	Gauge port charge pressure
M_{St}	Gauge port pilot pressure
p_{ac1}	Accumulator port
p_{Sp1}, p_{Sp2}	Port for external charge flow
p_{St1}	Port for pilot flow
p_{St}	Port for pilot flow to control
p_{St2}	Pilot pump outlet port
S	Suction port for charge and pilot pump
T	Tank port
1	Basic pump
1.1	High pressure relief valve
2	Charge block
2.1	Charge check valve
2.2	Charge pressure relief valve
2.3	Charge flor filter
2.4	Clogging indicator for charge flow filter
3	Flushing block
3.1	Low pressure relief valve
3.2	Flushing flow shuttle valve
6	Manifold
6.1	Pilot pressure relief valve
7	Charge/pilot pump

Hydraulic Transmission Circuit

without Charge Flow Filter

Size 130 750

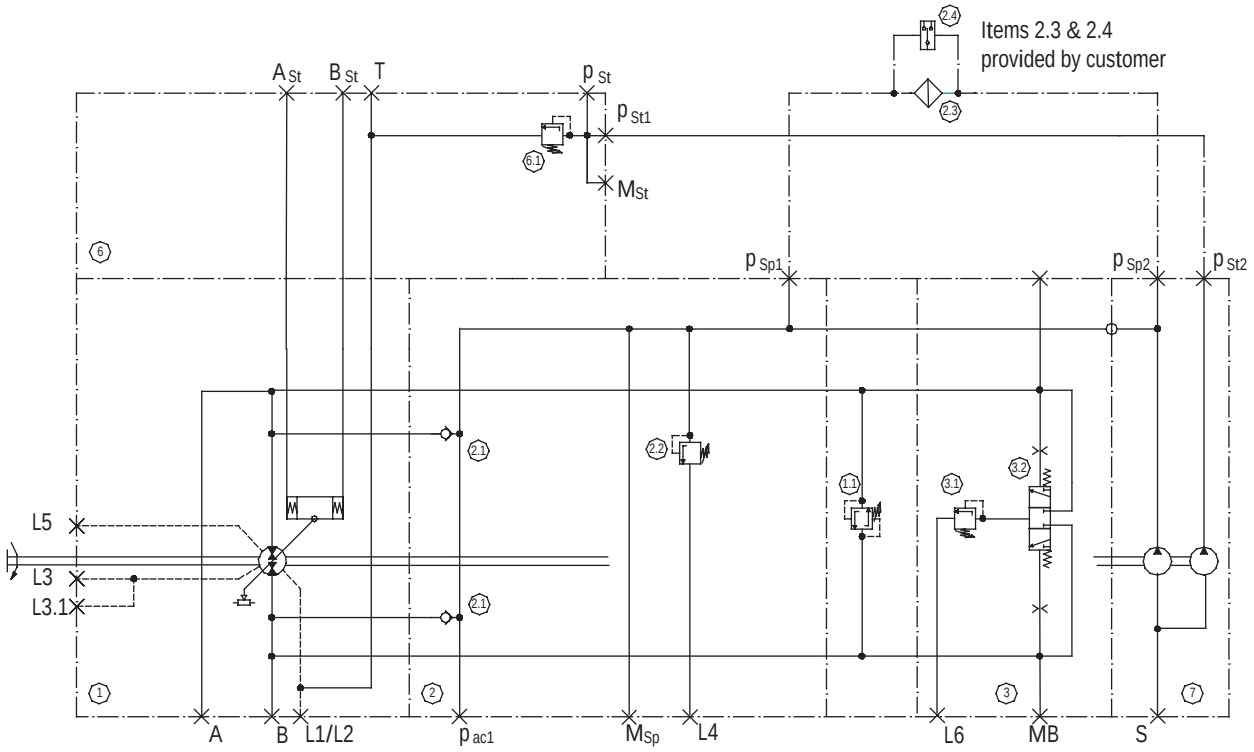

A, B	System port	MA, MB	Gauge port system pressure	S	Suction port for charge and pilot pump	3	Flushing block
A_{St}, B_{St}	Control	M_{Sp}	Gauge port charge pressure	T	Tank port	3.1	Low pressure relief valve
L1, L2	Drain port	M_{St}	Gauge port pilot pressure	1	Basic pump	3.2	Flushing flow shuttle valve
L3	Ventilation port for vertical mounting	p_{ac1}	Accumulator port	1.1	High pressure relief valve	6	Control Manifold
L3.1	Air bleeding port for vertical mounting	p_{Sp1}	Port for external charge flow	2	Charge block	7	Charge/pilot pump (option)
L4	Return line charge flow	p_{St1}	Port for pilot flow	2.1	Charge check valve		
L5	Oil filling plug	p_{St2} port	Pilot pump outlet	2.2	Charge pressure relief valve		
L6	Return line charge flow						

Hydraulic Transmission Circuit

Combination of Two Pumps

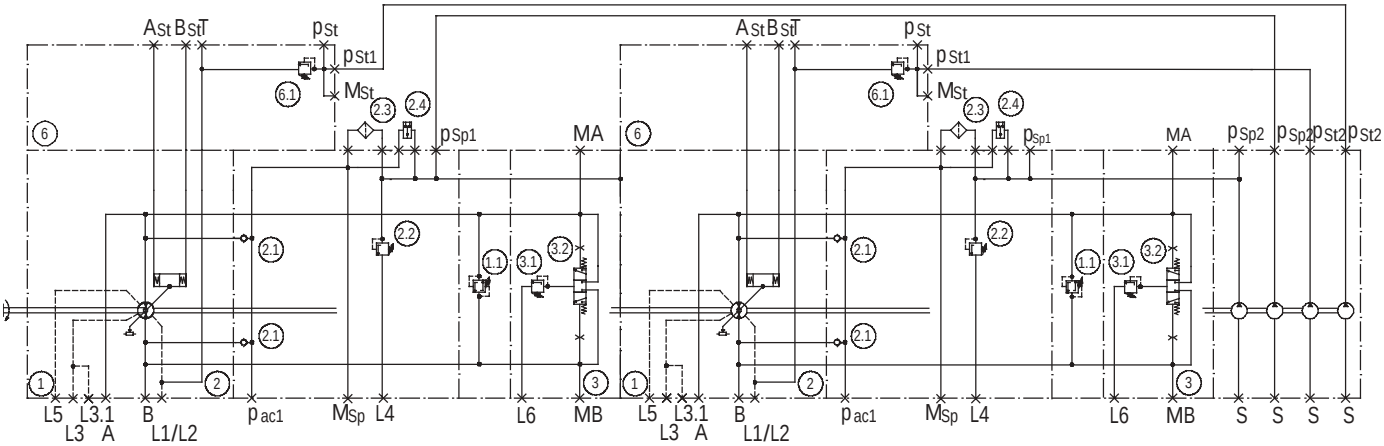

A, B	System port	MA, MB	Gauge port system pressure	p_{St2}	Pilot pump outlet port	2.2	Charge pressure relief valve
A_{St}, B_{St}	Control	M_{Sp}	Gauge port charge pressure	S	Suction port for charge and pilot pump	3	Flushing block
L1, L2	Drain port	M_{St}	Gauge port pilot pressure	T	Tank port	3.1	Low pressure relief valve
L3	Ventilation port for vertical mounting	p_{ac1}	Accumulator port	1	Basic pump	3.2	Flushing flow shuttle valve
L3.1	Air bleeding port for vertical mounting	p_{Sp1}	Port for external charge flow	1.1	High pressure relief valve	6	Control manifold
L4	Return line charge flow	p_{Sp2}	Charge pump outlet pump	2	Charge block	6.1	Pilot pressure relief valve
L5	Oil filling plug	p_{St1}	Port for pilot flow	2.1	Charge check valve		
L6	Return line charge flow						

Controls – Electric Motor Displacement Control ES

The unit is used for stepless flow adjustment. It has a three phase electric servo motor, worm gearing and a switch box with 4 and 8 limit switches for 4 or 8 positions. A potentiometer is also available.

The response times from zero to maximum depends on the chosen ratio and the speed of the servo motor (this means that during operation the response times are not variable.

No pressure/power limiter possible.

Explosion protection version are also available.

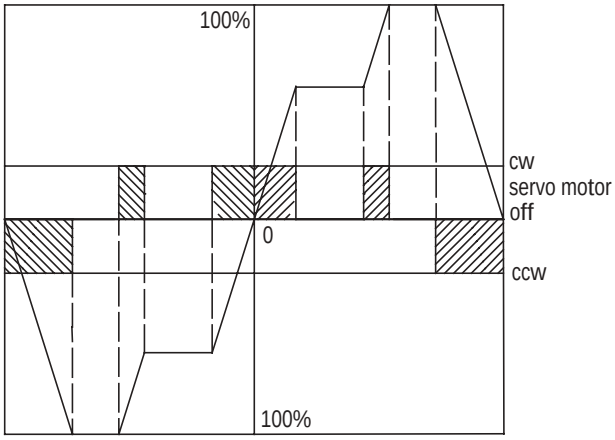

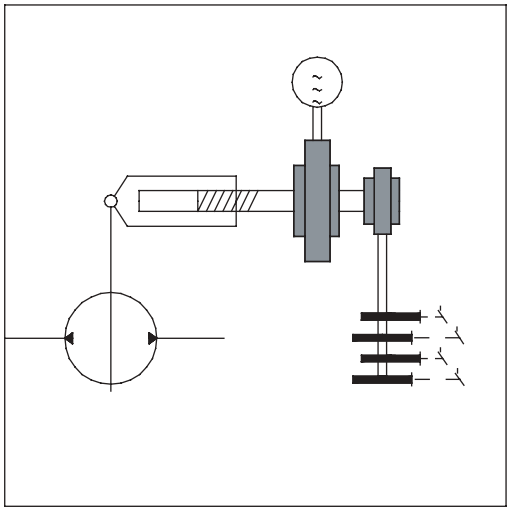

THEORETICAL RESPONSE TIME (SEC) FOR MAX. DISPLACEMENT

Size	130		180		250		360		500		750	
Freq. Hz	50	60	50	60	50	60	50	60	50	60	50	60
Fast	10	8	10	8	8	7	11	9	10	8	14	12
Medium	20	17	20	17	20	17	27	23	24	20	35	29
Slow	50	42	50	42	40	33	55	46	48	40	70	58

Response time from 0 to $+Q_{max}$ or 0 to $-Q_{max}$

Controls –

Controls for Position/ Displacement DP, SP, SM

The electro or pressure proportional hydraulic displacement control will operate a hydrostatic drive in all four quadrants and work without throttle losses within either electrically or hydraulically adjustable limits. This done by controlling delivery flow respect; ie. swash angle.

The displacement of the axial piston unit is proportional to the swash plate angle and can be adjusted by a spring centered servo piston.

The servo piston is controlled by the required input signal with a mechanical, hydraulic or electrical control device.

Economical and energy saving drives can be produced with the "building block" principle for open loop and closed circuits as well.

Note: setting the pressure compensator or a control or a constant power, lower than the adjusted pilot oil pressure ps min= 60/80 bar (870/1160 psi), is not possible.

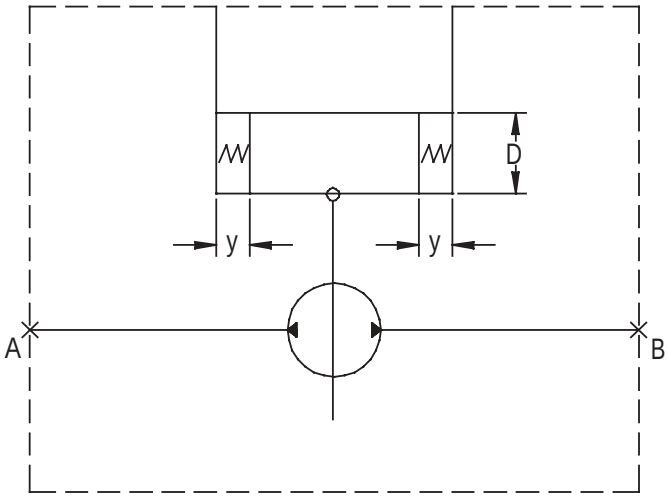

Pressure Limitation:

Each of the servo controls DP, SM and SP can be combined with a hydromechanical pressure limitation control. This destrokes the swash plate when the system pressure reaches a control setting. The response time for de-stroking the the pump is much faster than that of the servo control alone.

The pressure limitation control can also operate the unit in the motor mode of operation. This means when the hydraulic motor delivers energy to the system e.g. from energy stored in a flywheel, the pump goes over-center thus acting as a motor delivering mechanical energy to the drive, as in a mooring control function.

For each of the system sides, A and B, a separate pressure control is required. This control consist of a main stage valve conducting the system pressure to the pump actuator piston a pressure relief valve where the pressure is set. The minimum setting of this valve cannot be lower than the pilot pressure.

Power Limitation (Torque Control):

An additional power limitation valve can be used in conjunction with the pressure limitation control. This senses the position of the pump actuator piston which is proportional to the swash plate angle. In accordance with the swash plate angle the pressure adjustment is set to a determined level to follow a hyperbolic relationship between flow and pressure.

High Flow - Low Pressure

Low Flow - High Pressure

The power level, a function of the product of flow and pressure, is hence adjustable.

Controls – Pressure Signal Displacement Control DP

The output flow of the pump is proportional to the pilot pressure. Each of the two pilot ports is responsible for an output flow direction.

A separate pilot oil circuit is necessary with p_{min} 60/80 bar, Q_{St} = 12 l/min (3.17 USgpm). From this the control pressure is reduced to the desired set value by means of a suitable circuit.

For exchange with:

Pressure limiting valve (mechanical or proportional) from P to T line and throttle in P line 0,8 Dia. (0.03)

The pressure proportional adjustment can also be supplied with a pressure and/or power limitation.

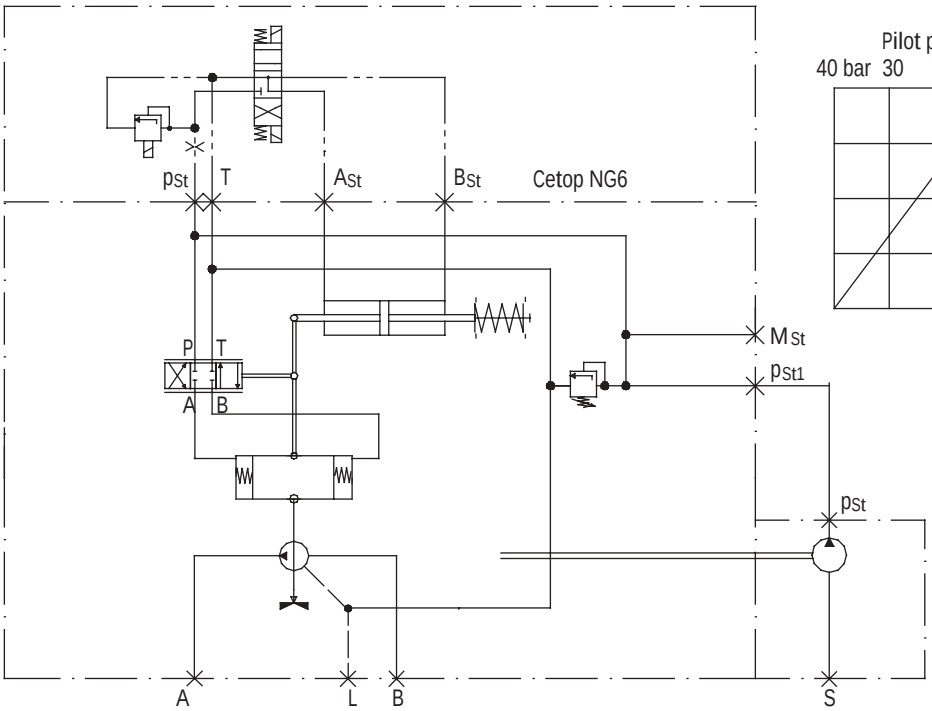

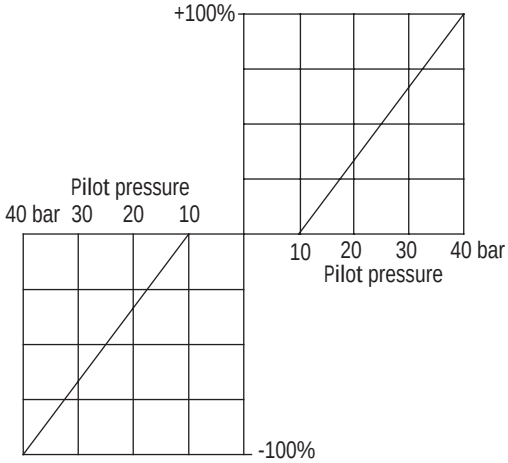

Pressure proportional adjustment DP

The output flow of the pump is proportional to the pilot pressure. Each of the two pilot ports is responsible for an output flow direction.

SIZE	RESPONSE TIME (S) 12 L/MIN	RESPONSE TIME* (S) PRESSURE CONTROL DESTROKING	PILOT PRESSURE P_{ST} BAR
130/180	0.8	0.07	60
250/360	1.0	0.08	60
500/750	2.2	0.110	80

*Measured with a 2m pressure line of diameter 50 mm

Controls – Example for TVW - DP Control

with Pressure - & Power Limiter

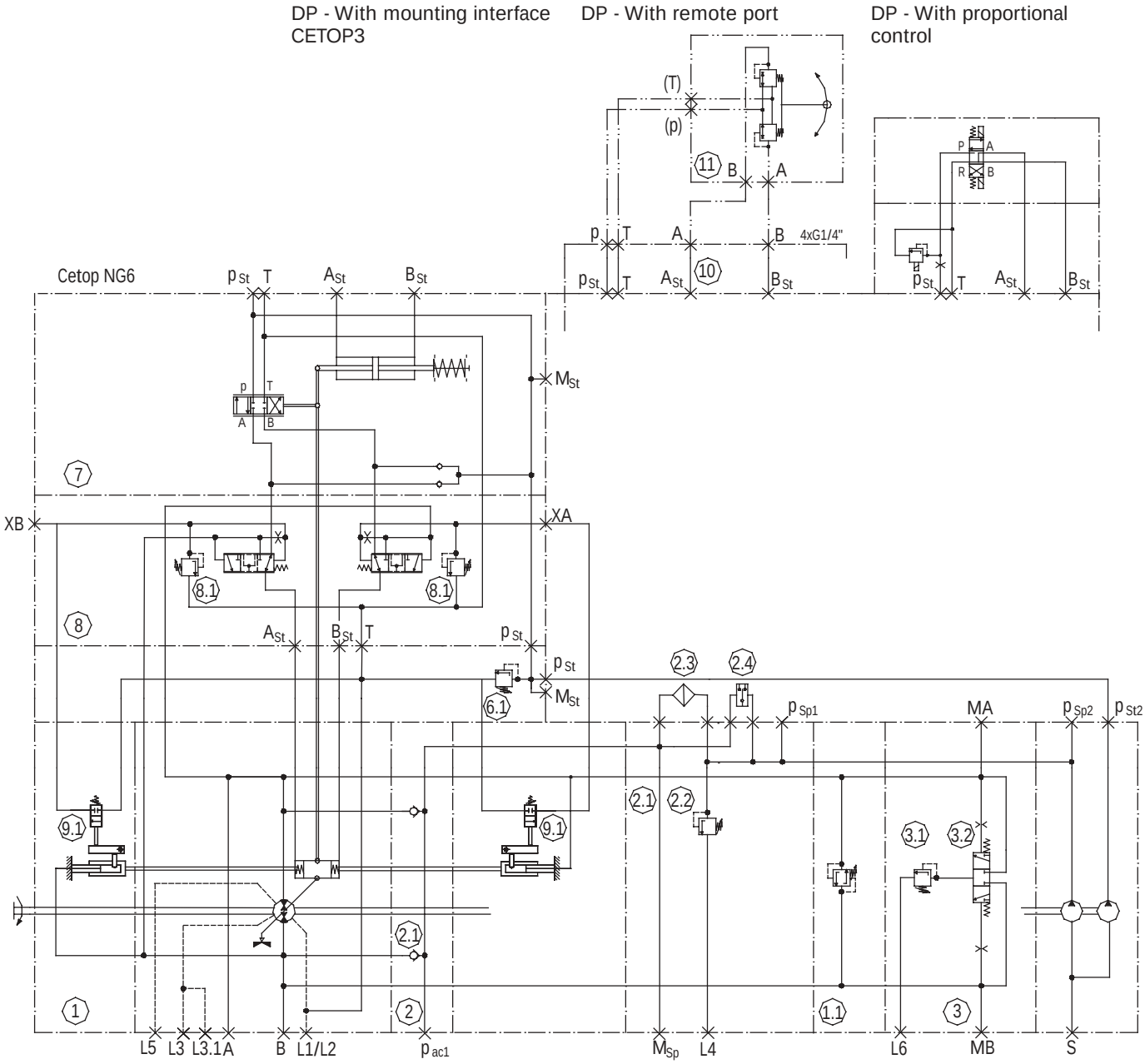

A, B	System port
A_{St}, B_{St}	Control
L1, L2	Drain port
L3	Ventilation port for vertical mounting
L3.1	Air bleeding port for vertical mounting
L4	Return line charge flow
L5	Oil filling plug
L6	Return line charge flow
MA, MB	Gauge port system pressure
M_{Sp}	Gauge port charge pressure
M_{St}	Gauge port pilot pressure
p_{ac1}	Accumulator port
p_{Sp1}	Port for external charge flow
p_{St1}	Port for pilot flow
$p_{St1.1}$	Port for pilot flow
p_{St2}	Pilot pump outlet port
S	Suction port for charge and pilot pump
T	Tank port
XA, XB	Pilot port pressure control
1	Basic pump
1.1	High pressure relief valve
2	Charge block
2.1	Charge check valve
2.2	Charge pressure relief valve
2.3	Filter
2.4	Clogging indicator
3	Flushing block
3.1	Low pressure relief valve
3.2	Flushing flow shuttle valve
6	Control manifold
6.1	Pilot pressure relief valve
7	DP-Control
8.1	Pressure limiter 100 to 350 bar

Controls – Proportional Valve Displacement Control SP

The electro hydraulic displacement control will operate a hydrostatic drive in all four quadrants and work without throttle losses within electrically adjustable limits.

This is done by controlling delivery flow with swash plate angle feedback.
All control valves are recorded as an electrical signal and lead back to the control card. The proportional valve or servo valve and servo piston transform the output signal of the control card to the desired setting.

This results in a very precise and dynamic control

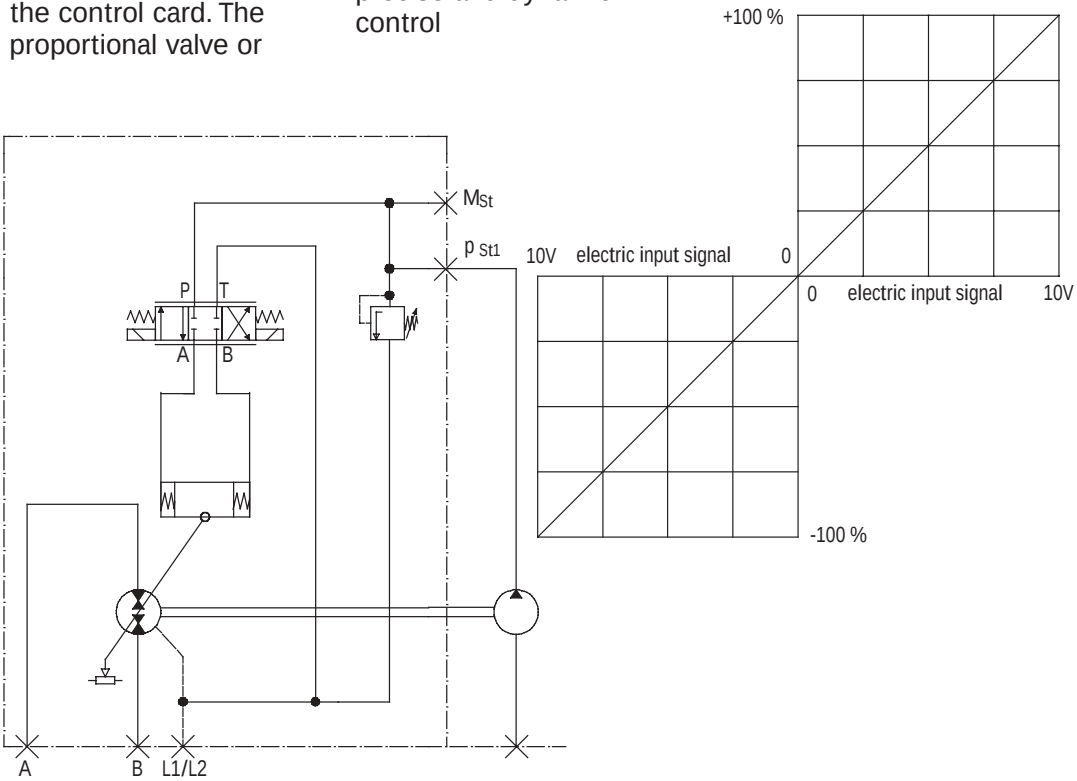

Electrohydraulic servo adjustment SP
The electro hydraulic displacement control will operate a hydrostatic drive in all four quadrants and work without throttle losses within electrically adjustable limits. This is done by controlling delivery flow swash plate angle feedback

PROPORTIONAL VALVE

	NOMINAL FLOW		CONTROL PRESSURE PST	CONTROL ELECTRONICS	RESPONSE TIME	UNIT SIZE	SERVO PISTON		VOLUME
	L/MIN (USGPM)	AT ΔP BAR (PSI)	BAR (PSI)		0 < > VMAX [MS]	CM³ (IN³)	DIAMETER MM (IN)	STROKE MM (IN)	CM³ (IN³)
Medium response (CETOP 3)	12 (3.17)	10 (150)	60 (870) to 80 (1160)	ER 9.0 - 10	250 to 800	130 (7.9)	60 (2.36)	21 (.83)	59 (3.60)
						180 (11)	60 (2.36)	21 (.83)	59 (3.60)
						250 (15.2)	75 (2.95)	18 (.71)	79 (4.82)
						360 (22)	75 (2.95)	25 (.98)	110 (6.71)
						500 (30.5)	75 (2.95)	22 (.87)	97 (5.92)
						750 (45.7)	75 (2.95)	30 (1.18)	132 (8.06)
High response (CETOP 5)	40 (11) to 80 (21)	70 (1000)	80 (1160) to 100 (1450)	ER 9.4 - 10	40 to 150	130 (7.9)	60 (2.36)	21 (.83)	59 (3.60)
						180 (11)	60 (2.36)	21 (.83)	59 (3.60)
						250 (15.2)	75 (2.95)	18 (.71)	79 (4.82)
						360 (22)	75 (2.95)	25 (.98)	110 (6.71)
						500 (30.5)	75 (2.95)	22 (.87)	97 (5.92)
						750 (45.7)	75 (2.95)	30 (1.18)	132 (8.06)

Controls – Control Cards

SP - Control with Pressure and Power Limitation

Control Cards

The ER 9.3 - 10 and ER 9.4 - 10 Digital control cards are available and optimized for use with the SP - Control. Software is available for parameter setting and storing (Database function).

Contact Eaton to request the free of charge manual- and software CD.

SP - Control with pressure and power limitation

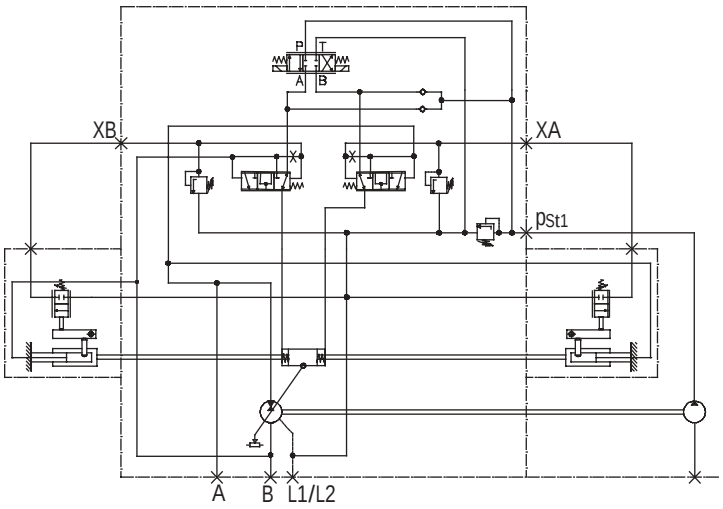

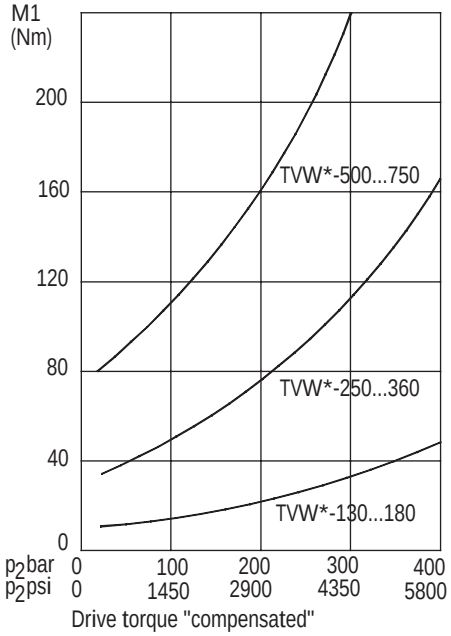

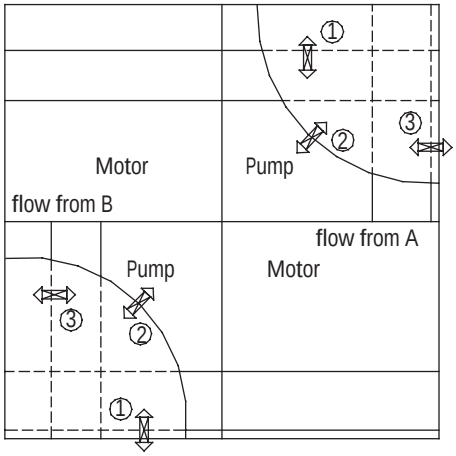

1 Pressure limiter setting

2 Power limiter setting

3 SP Displacement control

The patented circuit provides extremely short response times for the pressure compensator regardless of the servo control used: The response time is independent from the particular flow characteristic!

FRAME SIZE	RESPONSE TIME WHEN COMPENSATING FROM +/- V_{MAX} — 0
130/180	80 ms
250/360	90 ms
500/750	110 ... 130 ms

Controls – SP Control with and without Pressure Limitation

Example for TVWS

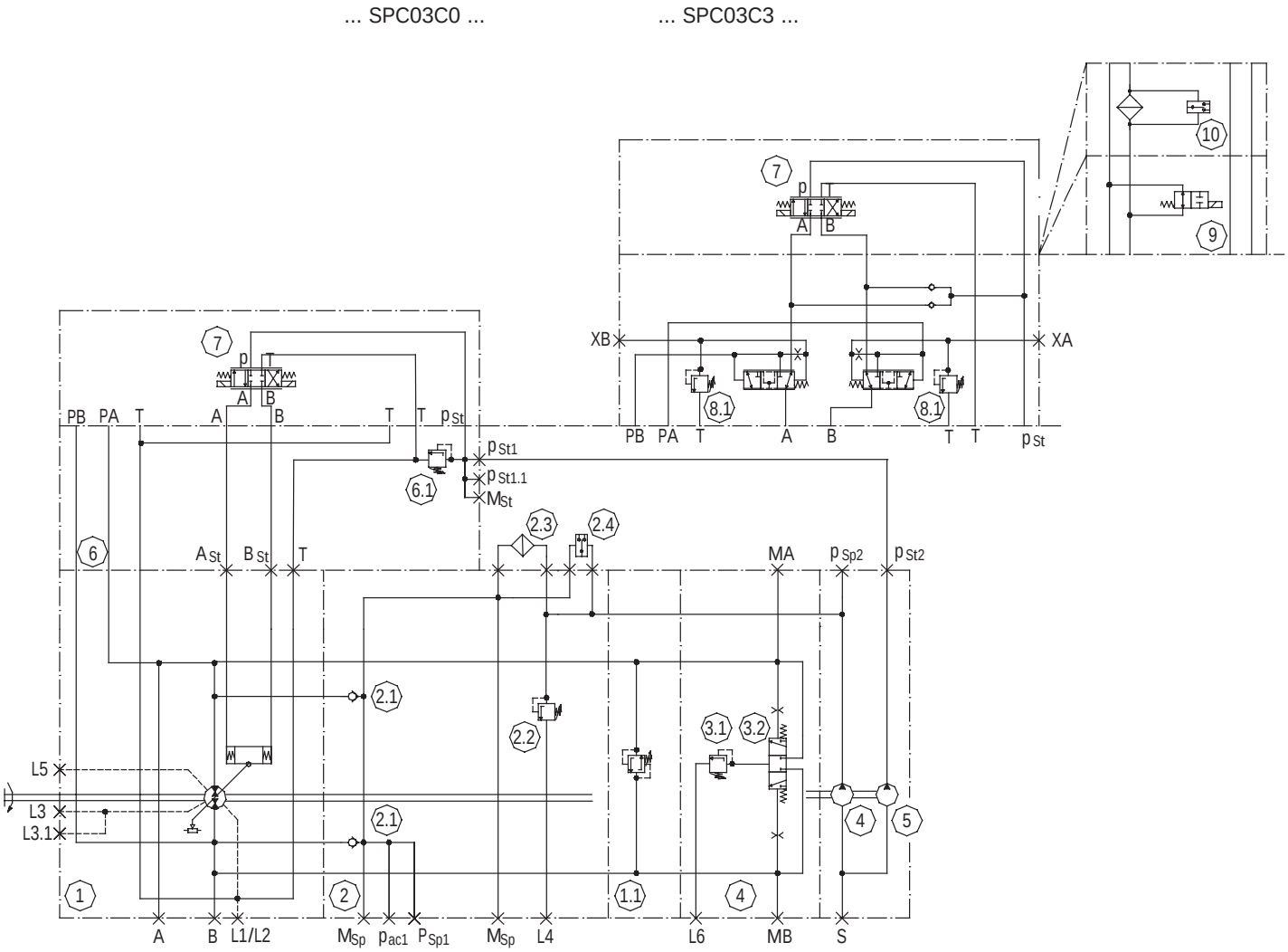

A, B	System port
A_{St}, B_{St}	Pilot oil port pump side A, B
L1, L2	Drain port
L3	Ventilation port for vertical mounting
L3.1	Air bleeding port
L4	Drain port (charge oil)
L5	Oil filling plug
L6	Drain port (flushing oil)
L7	Port for return line of control circuit
MA, MB	Gauge port system pressure
M_{Sp}	Gauge port charge pressure
M_{St}	Gauge port pilot pressure
p_{ac1}	Accumulator port
p_{Sp1}	External port charge flow
p_{Sp2}	Additional charge pump outlet port
p_{St1}	Port for pilot pressure
$p_{St1.1}$	Port for pilot pressure
p_{St2}	Piston pump outlet port
S	Suction port for charge and pilot pump
T	Tank port
XA, XB	Pilot port pressure control
1	Basic pump
1.1	High pressure relief valve
2	Charge block
2.1	Charge check valve
2.2	Charge pressure relief valve
3	Flushing block
3.1	Low pressure relief valve
3.2	Flushing flow shuttle valve
4	Charge pump
5	Pilot pump
6	Connection plate for SP-Control
6.1	Pilot pressure relief valve
7	Proportional valve
8.1	Pressure limiter 100 to 350 bar
9	Fail safe valve intermeditate plate
10	Pilot oil filter

Controls – Servo Adjustment Displacement Control with Mechanical Feedback SM

- Servo control with integrated mechanical feedback of swash plate position. Mainly used in hazardous environments.
- No electronic control card necessary
- Input signal ± 50 mA (linear coil connection) ; ± 100 mA (parallel coil connection)
- Hysteresis, repeatability: 8% of end value
- Available in explosion proof class Eex i II version for hazardous duty.
- Pressure/power limitation available

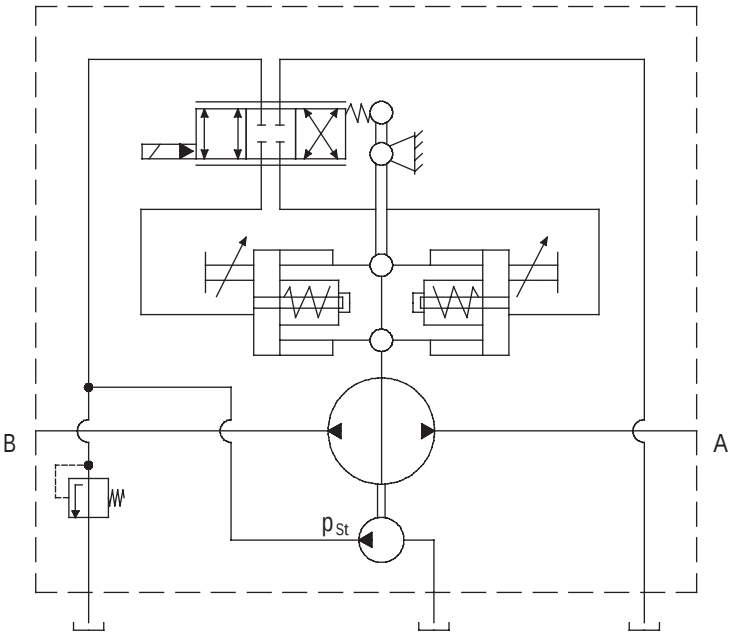

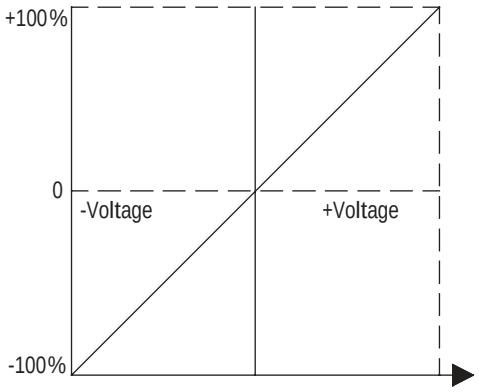

Pump Dimensions - TVWS 130/180

Dimensions in mm

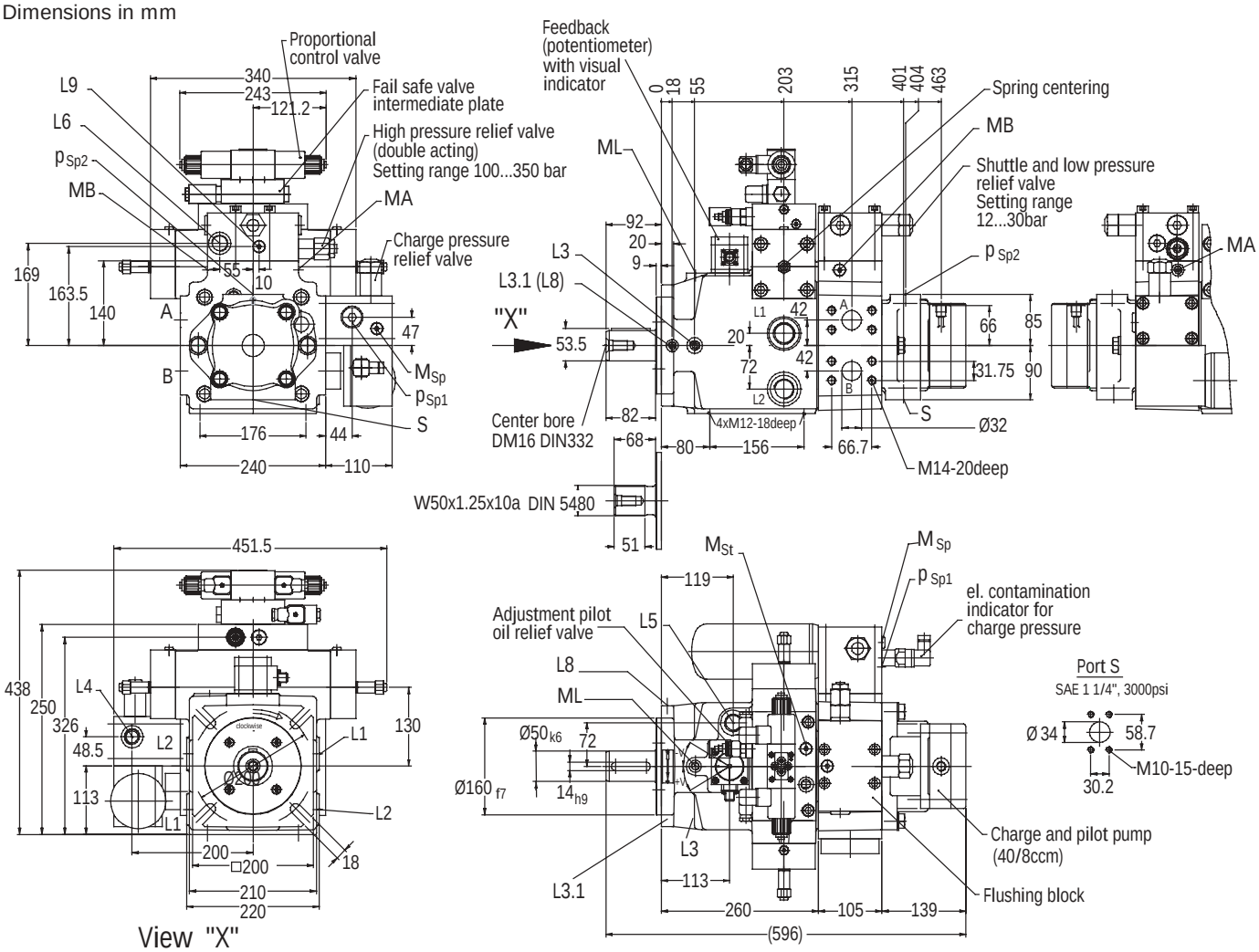

DIRECTION OF ROTATION	RANGE OF SWASH ANGLE	INPUT	OUTPUT
Right Hand Rotation	To + V_{max}	B	A
	To - V_{max}	A	B

For left hand rotation a special setup of charge and pilot pump is required!

A	System pressure port SAE 1 1/4", 6000 psi	L4	Drain port G 3/4" (charge oil)	(MB)	Gauge port system pressure G 1/4"	p_{Sp2}	Additional charge pump outlet port G 3/4" (closed)
(L1)	Drain port 1 1/16" - 12 UNF-2B (according to mounting position use upper port)	L5	Oil filling plug 1 1/16" - 12 UNF-2B	(ML)	Gauge port of case pressure G 1/4"	S	Suction port of charge and pilot pump SAE 1 1/4", 3000 psi (common port)
L2	Drain port G 1" (according to mounting position use upper port)	L6	Drain port G 3/4" (flushing oil)	(M_{Sp})	Gauge port of charge pressure G 1/4"	(...)	Normally plugged
(L3)	Ventilation port for vertical mounting G 3/8" (shaft upwards)	(L8)	Air bleeding port G 1/4"	(M_{St})	Gauge port of pilot pressure G 1/4"		
		(L9)	Drain port for low pressure relief valve G 1/4"	p_{Sp1}	External port of charge pressure G 3/4"		
		(MA)	Gauge port system pressure G 1/4"				

Pump Dimensions - TVWS 250

Dimensions in mm

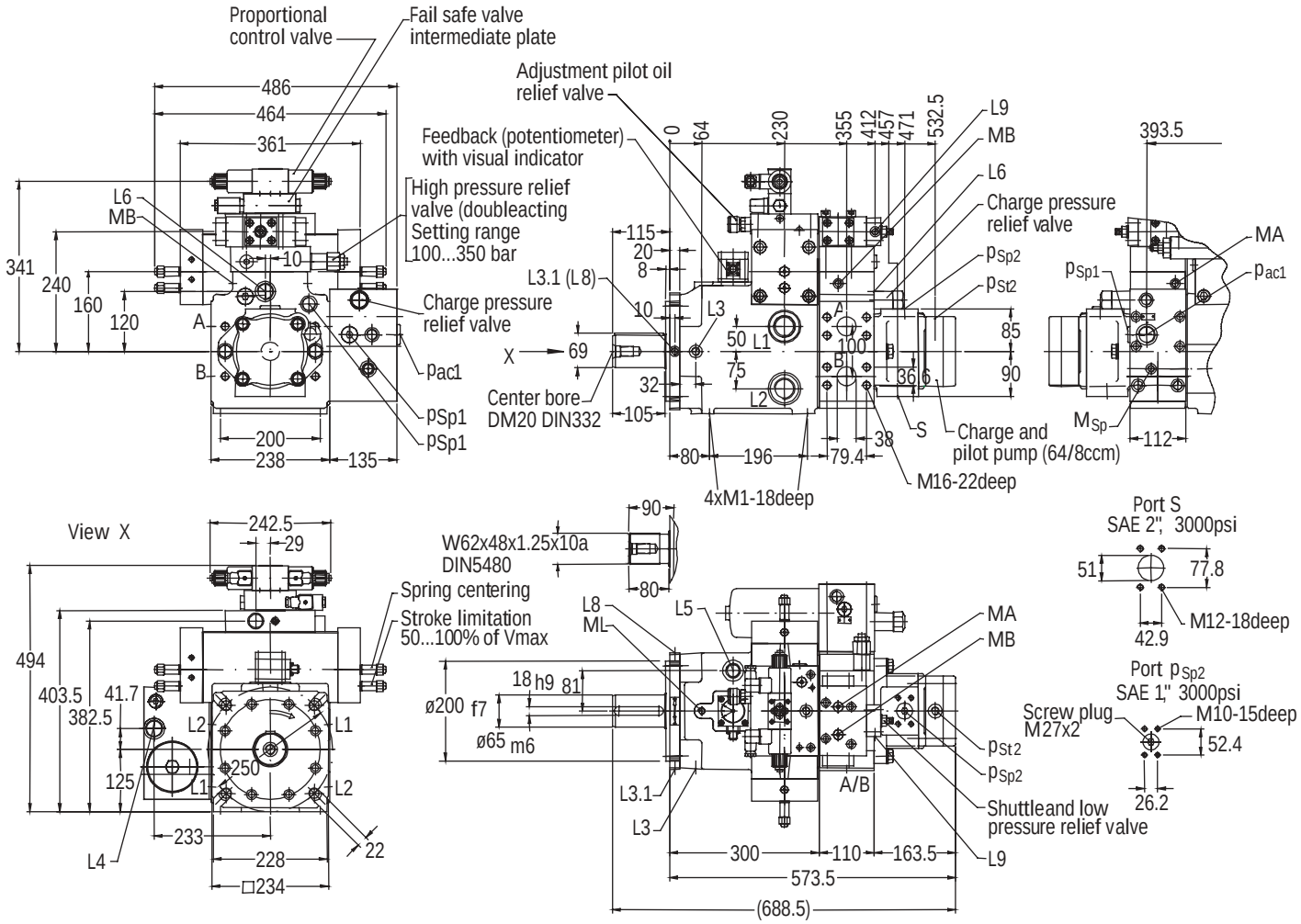

DIRECTION OF ROTATION	RANGE OF SWASH ANGLE	INPUT	OUTPUT
Right Hand Rotation	To + V_{max}	B	A
	To - V_{max}	A	B

For left hand rotation a special setup of charge and pilot pump is required!

A	System pressure port SAE 1 1/2", 6000 psi	(L3)	Ventilation port for vertical mounting G 3/8" (shaft upwards)	(L9)	Drain port for low pressure relief valve G 1/4"	(p_{Sp1})	External port of charge pressure G 3/4"
B	System pressure port SAE 1 1/2", 6000 psi	(L3.1)	Port G 1/8"	(MA)	Gauge port system pressure G 1/4"	(p_{Sp2})	Additional charge pump outlet port M27x2
(L1)	Drain port 1 5/8" - 12 UNF-2B (according to mounting position use upper port)	L4	Drain port G 1" (charge oil)	(MB)	Gauge port system pressure G 1/4"	p_{St2}	Pilot pump outlet port G 3/8"
L2	Drain port G 1 1/4" (according to mounting position use upper port)	(L5)	Oil filling plug 1 1/16" - 12 UNF-2B	(ML)	Gauge port of case pressure G 1/4"	S	Suction port of charge and pilot pump SAE 2", 3000 psi (common port)
		L6	Drain port G1" (flushing oil)	(M_{Sp})	Gauge port of charge pressure G 1/4"		
		(L8)	Air bleeding port G 1/4"	(p_{ac1})	Accumulator port G 1"		
						(...)	Normally plugged

Pump Dimensions - TVWS 360

Dimensions in mm

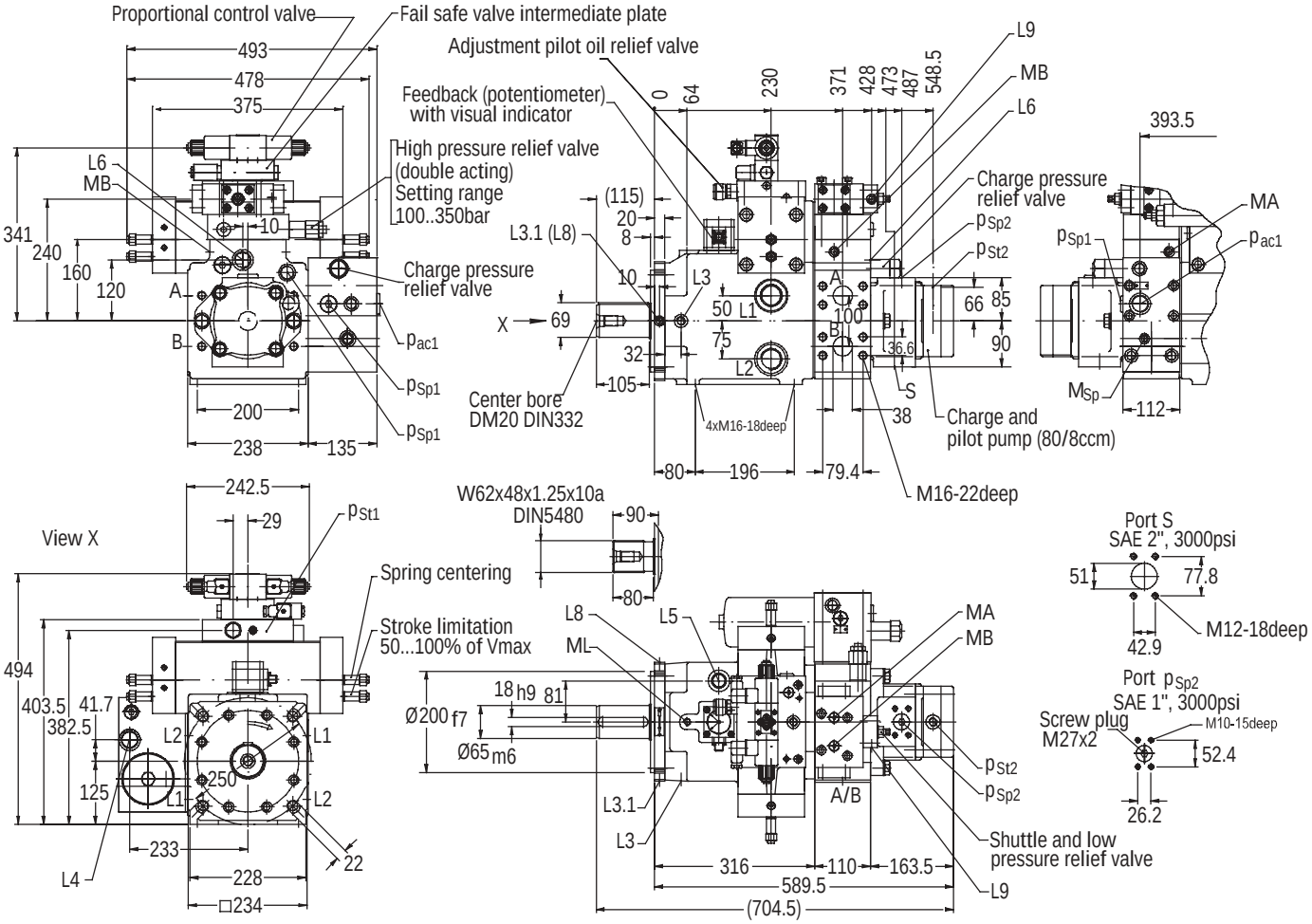

DIRECTION OF ROTATION	RANGE OF SWASH ANGLE	INPUT	OUTPUT
Right Hand Rotation	To + V_{max}	B	A
	To - V_{max}	A	B

For left hand rotation a special setup of charge and pilot pump is required!

A	System pressure port SAE 1 1/2", 6000 psi	(L3)	Ventilation port for vertical mounting G 3/8" (shaft upwards)	(MA)	Gauge port system pressure G 1/4"	(p_{Sp2})	Additional charge pump outlet port M27x2
B	System pressure port SAE 1 1/2", 6000 psi	(L3.1)	Port G 1/8"	(MB)	Gauge port system pressure G 1/4"	p_{St2}	Pilot pump outlet port G 3/8"
(L1)	Drain port 1 5/8" - 12 UNF-2B (according to mounting position use upper port)	L4	Drain port G 1" (charge oil)	(ML)	Gauge port of case pressure G 1/4"	S	Suction port of charge and pilot pump SAE 2", 3000 psi (common port)
L2	Drain port G 1/4" (according to mounting position use upper port)	(L5)	Oil filling plug 1 1/16" - 12 UNF-2B	(M_{Sp})	Gauge port of charge pressure G 1/4"	(...)	Normally plugged
		L6	Drain port G 1" (flushing oil)	(p_{ac1})	Accumulator port G 1"		
		(L8)	Air bleeding port G 1/4"	(p_{Sp1})	External port of charge pressure G 3/4"		
		(L9)	Drain port for low pressure relief valve G 1/4"				

Pump Dimensions - TVWS 500

Dimensions in mm

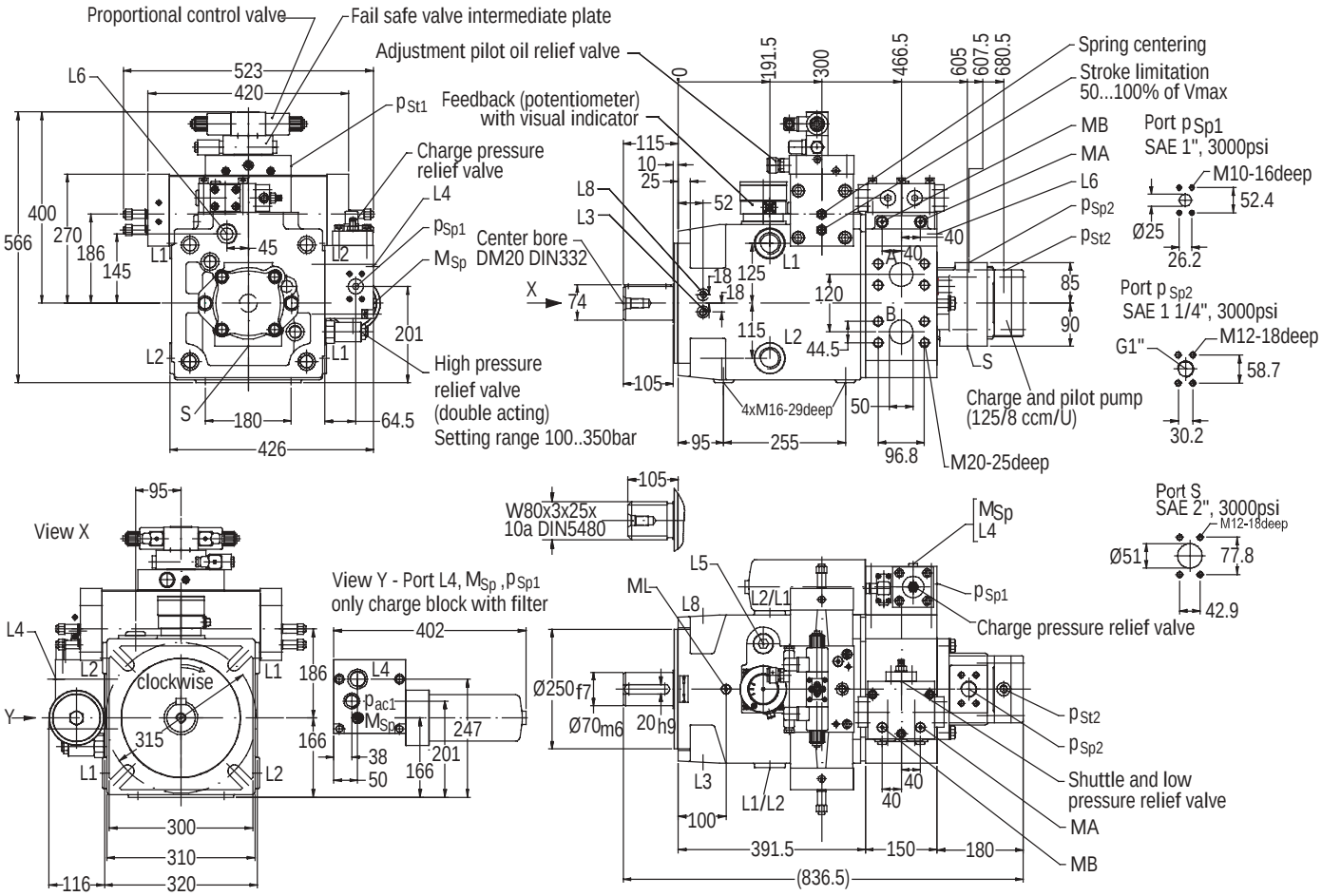

DIRECTION OF ROTATION	RANGE OF SWASH ANGLE	INPUT	OUTPUT
Right Hand Rotation	To + V_{max}	B	A
	To - V_{max}	A	B

For left hand rotation a special setup of charge and pilot pump is required!

A	System pressure port SAE 2", 6000 psi	(L3)	Ventilation port for vertical mounting G 3/8" (shaft upwards)	(MA)	Gauge port system pressure G 1/4"	(p_{Sp2})	Additional charge pump outlet port M27x2
B	System pressure port SAE 2", 6000 psi	(L3.1)	Port G 1/8"	(MB)	Gauge port system pressure G 1/4"	p_{St1}	Port of pilot pressure G 1/2"
(L1)	Drain port 1 5/8" - 12 UNF-2B (according to mounting position use upper port)	L4	Drain port G 1" (charge oil)	(ML)	Gauge port of case pressure G 1/4"	p_{St2}	Pilot pump outlet port G 3/8"
L2	Drain port G 1/2" (according to mounting position use upper port)	(L5)	Oil filing plug 1 1/16" - 12 UNF-2B	(M_{Sp})	Gauge port of charge pressure G 1/4"	S	Suction port of charge and pilot pump SAE 2", 3000 psi (common port)
		L6	Drain port G 1" (flushing oil)	(M_{St})	Gauge port of pilot pressure G 1/4"		
		(L8)	Air bleeding port G 1/4"	(p_{ac1})	Accumulator port G 1"		
		(L9)	Drain port for low pressure relief valve G 1/4"	(p_{Sp1})	External port of charge pressure G 3/4"	(...)	Normally plugged

Pump Dimensions - TVWS 750

Dimensions in mm

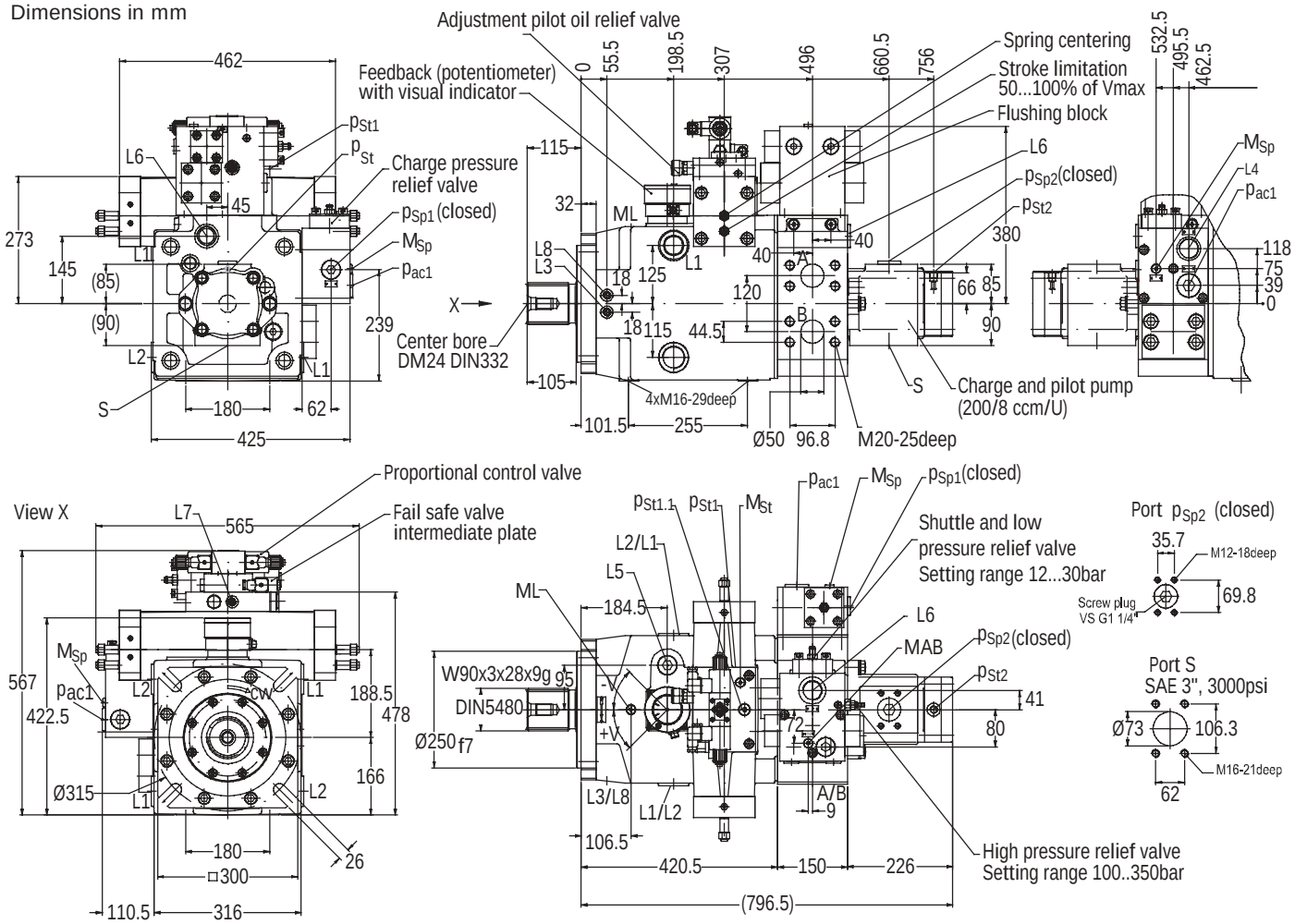

DIRECTION OF ROTATION		RANGE OF SWASH ANGLE	INPUT	OUTPUT
Right	Hand Rotation	To + V_{max}	B	A
		To - V_{max}	A	B

For left hand rotation a special setup of charge and pilot pump is required!

A	System pressure port SAE 2", 6000 psi	L6	Drain port G 1 1/4" (flushing oil)	(p_{ac1})	Accumulator port G 1 1/4"	p_{St2}	Pilot pump outlet port G 3/8"***
B	System pressure port SAE 2", 6000 psi	L7	Port G 3/8" for return line of control circuit	(p_{ac2})	Accumulator port G1 1/4" (optional)	S	Suction port of charge and pilot pump SAE 3", 3000 psi (common port)
(L1)	Drain port 1 5/8" - 12 UNF-2B*	(L8)	Air bleeding port G 1/4"	(p_{Sp1})	External port of charge pressure G 1" (Port of charge pressure internal)	(...)	Normally plugged
L2	Drain port G 1 1/2"*	(MAB)	Gauge port system pressure G 1/4"	(p_{Sp2})	Additional charge pump outlet port G 1/4"	*)	According to mounting position use upper port
(L3)	Ventilation port for vertical mounting G 3/8"**	(ML)	Gauge port of case pressure G 1/4"	p_{St1}	Port of pilot pressure G 1/2" ***	**)	Shaft upwards
L4	Drain port G 1 1/4" (charge oil)	(M_{Sp})	Gauge port of charge pressure G 1/4"	($p_{St1.1}$)	Port of pilot pressure G 3/8"***	***)	Piping by HYDROKRAFT (alternatively p_{St1} or $p_{St1.1}$)
(L5)	Oil filling plug 1 1/16" - 12 UNF-2B	(M_{St})	Gauge port of pilot pressure G 1/4"				

Control Dimensions - TVWS 130/180/250/360/ 500/750

ES Control

Dimensions in mm

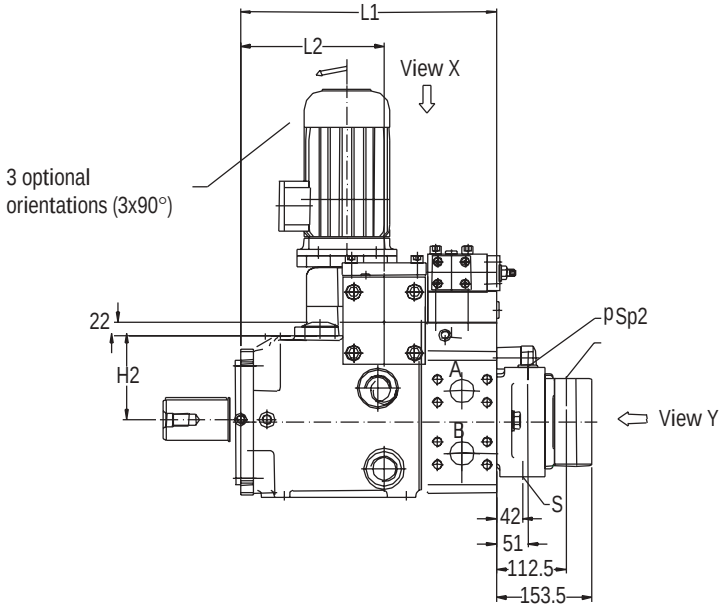

View X

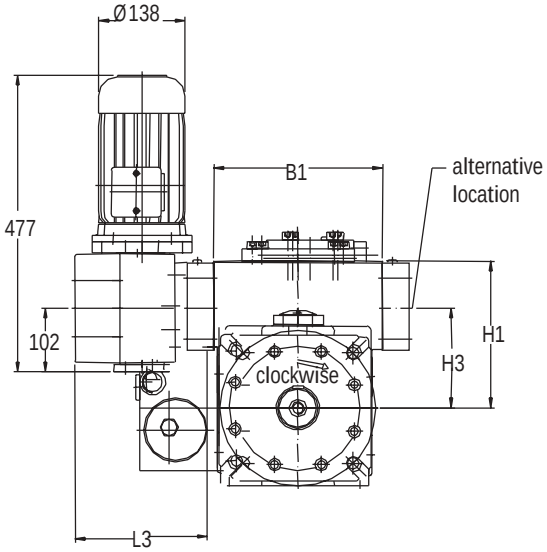

View Y

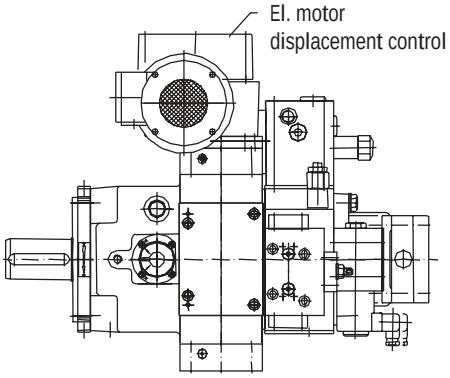

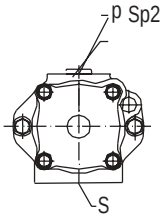

	L1	L2	L3	B1	H1	H2	H3
130*	365	203	216,5	256	192	120	130
180*	365	203	216,5	256	192	120	130
250	410	230	222	271	236	135	160
360	426	230	222	285	236	135	160
500	541,5	300	222	330	267,5	172	186
750	571	307	222	372	270	172	188,5

* Only alternative location possible.

DISPLACEMENT (CCM)

Pump Size	Charge Pump
130	40
180	40
250	63
360	87
500	125
750	200

Control Dimensions - TVWS 130/180 SP Control

Dimensions in mm

SP - With Prop. Valve
CETOP 3

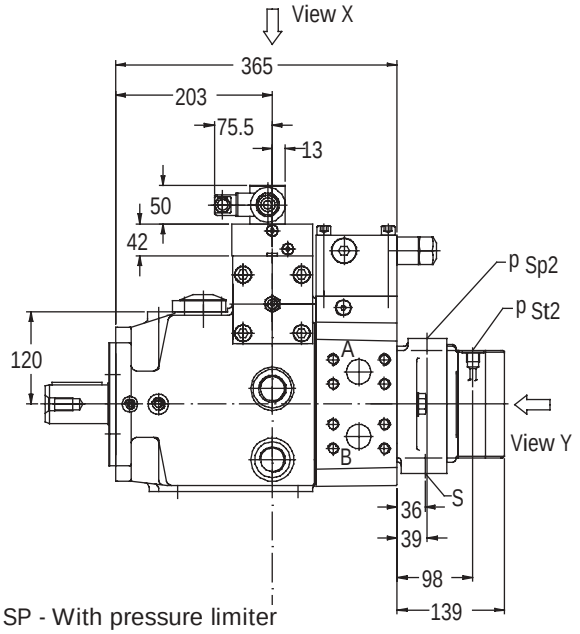

SP - With Prop. Valve
CETOP 3 + Fail safe valve

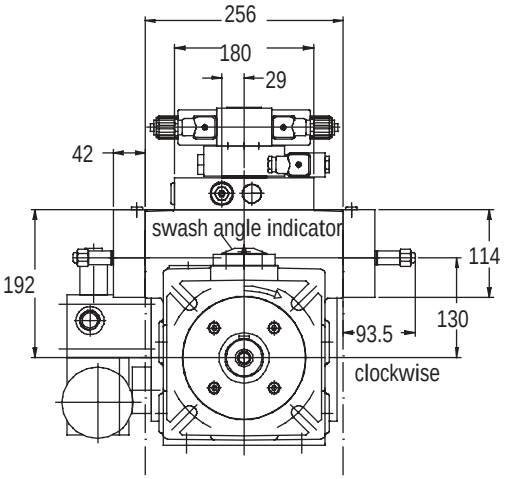

SP - With pressure limiter
overriding function

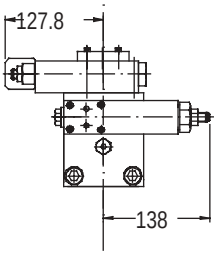

SP - With pressure limiter
overriding function

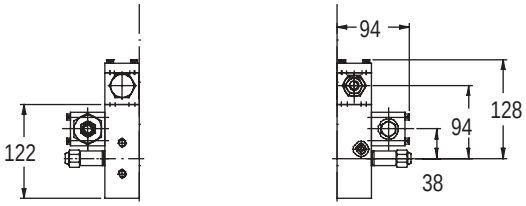

SP - With pressure limiter
and power control overriding
function

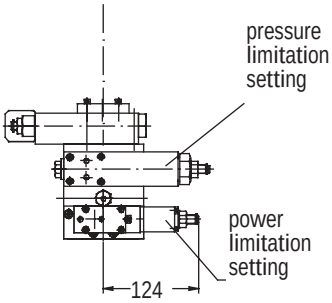

SP - With pressure limiter
and power control overriding
function

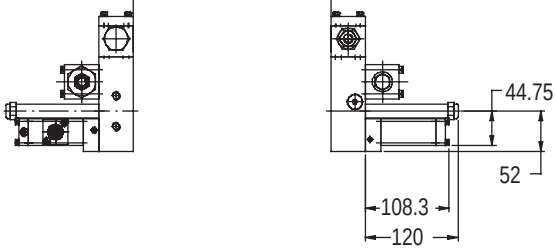

Control Dimensions - TVWS 130/180 SP Control

Dimensions in mm

SP - With Prop. Valve CETOP 3 + filter with el. indicator

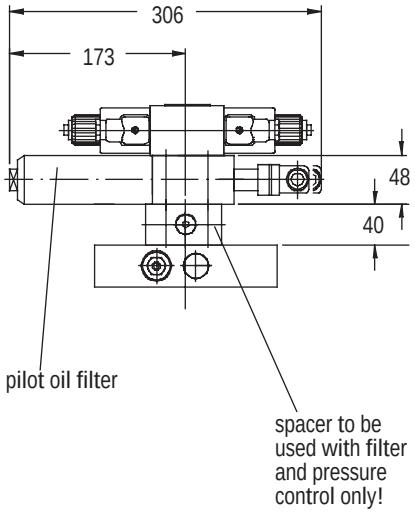

SP - With Prop. Valve CETOP 3 + filter with visual indicator + fail safe valve

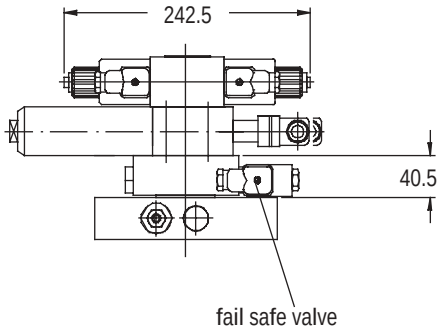

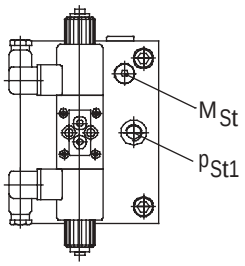

View Y

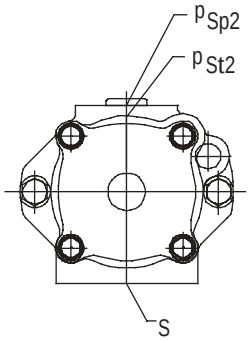

charge & pilot pump 40/8ccm

Control Dimensions - TVWS 250/360/500/750 SP Control

Dimensions in mm

SP - With Prop. Valve
CETOP 3

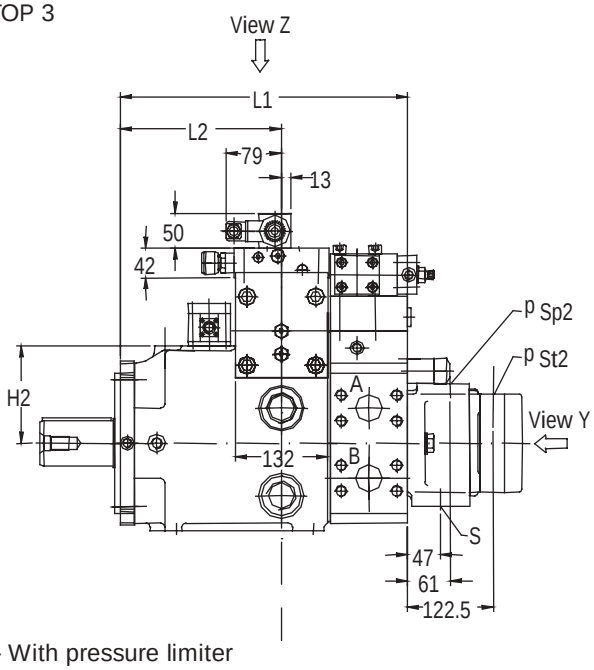

SP - With Prop. Valve
CETOP 3 + Fail safe valve

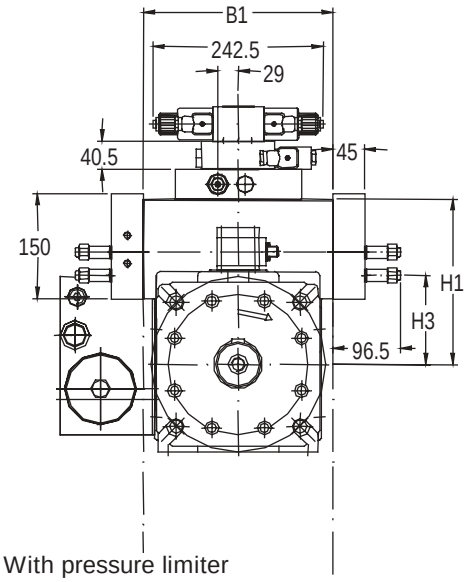

SP - With pressure limiter
overriding function

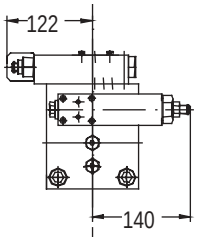

SP - With pressure limiter
overriding function

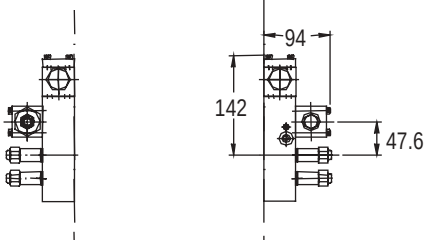

SP - With pressure limiter and
power control overriding
function

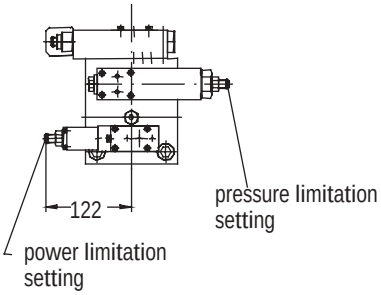

SP - With pressure limiter and
power control overriding
function

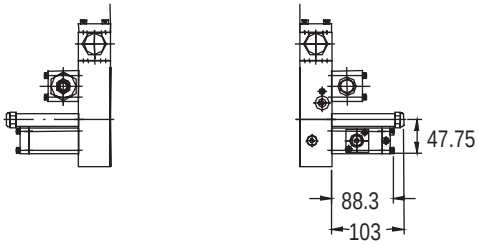

	L1	L2	B1	H1	H2	H3
250	410	230	271	236	135	160
360	426	230	285	236	135	160
500	541,5	300	330	267,5	172	186
750	571	307	372	270	172	188,5

Control Dimensions - TVWS 250/360/500/750 SP Control

Dimensions in mm

SP - With Prop. Valve CETOP 3 + filter with el. indicator

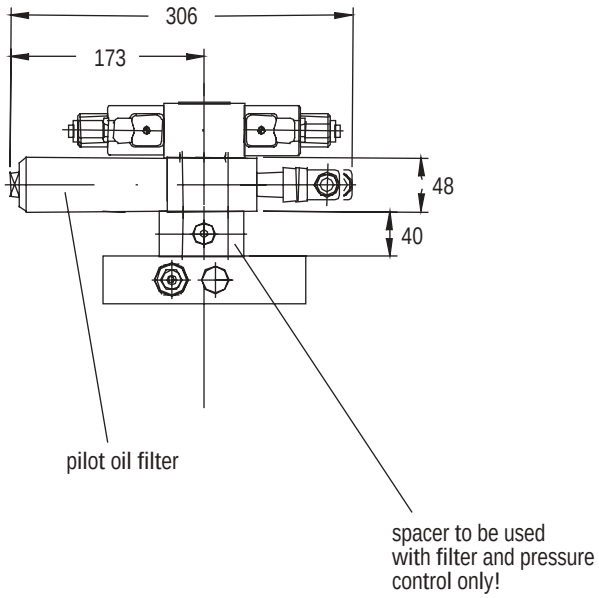

SP - With Prop. Valve CETOP 3 + filter with visual indicator + fail safe valve

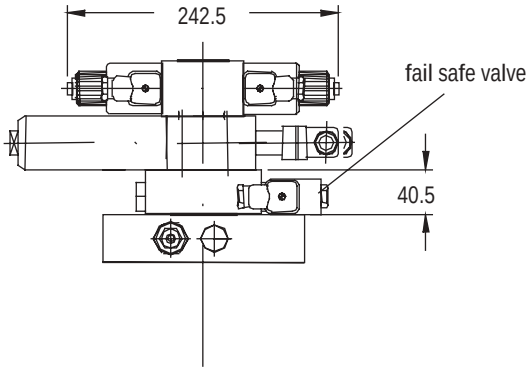

View Z

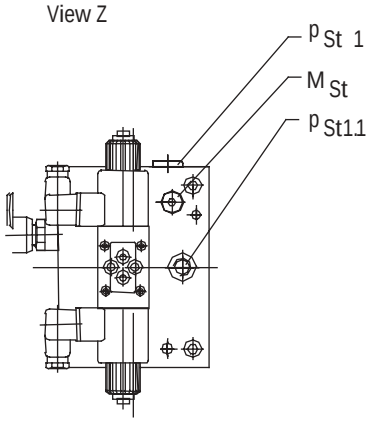

View Y

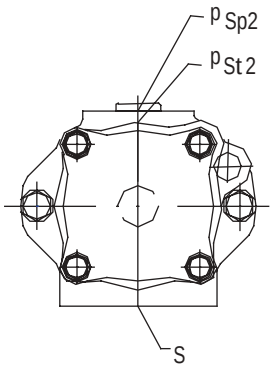

DISPLACEMENT FOR CHARGE PILOT PUMPS (CCM)

Pump Size	Charge Pump	Pilot Pump
250	64	8
360	80	8
500	125	8
750	200	8

Control Dimensions - TVWS 130/180 DP Control

Dimensions in mm

DP - With remote control

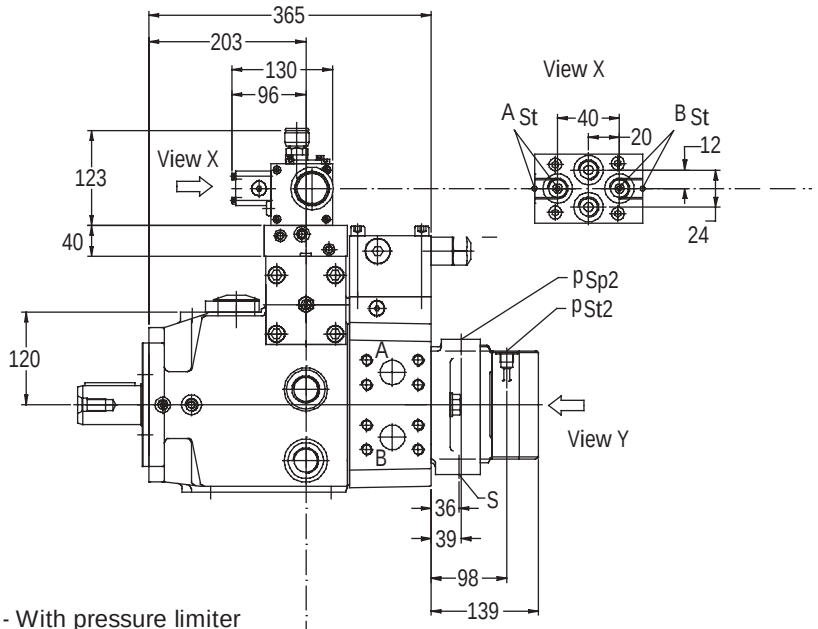

DP - With pressure limiter overriding function

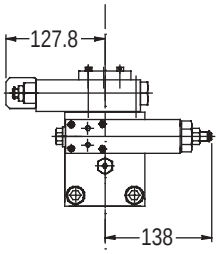

DP - With pressure limiter and power control overriding function

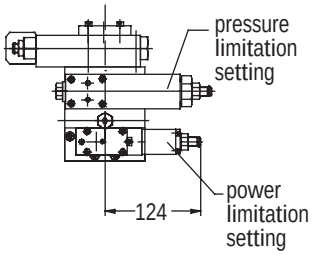

Control Dimensions - TVWS 130/180 DP Control

Dimensions in mm

DP - With mounting interface CETOP 3

DP - With prop. relief

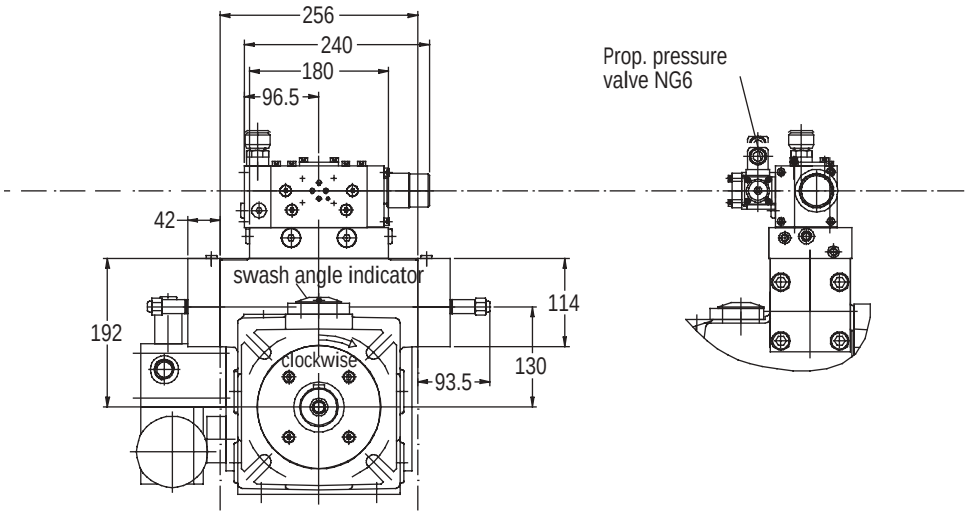

DP - With pressure limiter overriding function

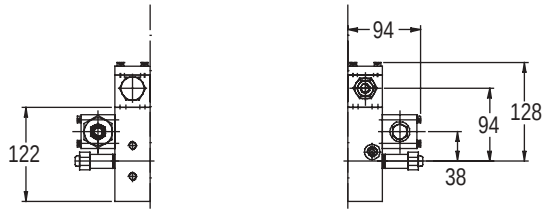

View Y

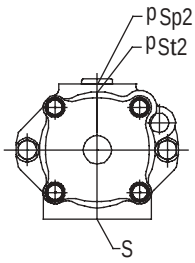

charge & pilot pump 40/8ccm

DP - With pressure limiter and power control overriding function

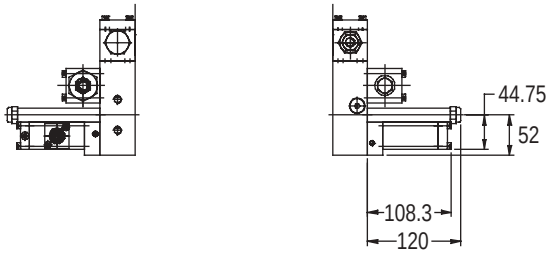

Control Dimensions - TVWS 250/360/500/750 DP Control

Dimensions in mm

DP - With remote port

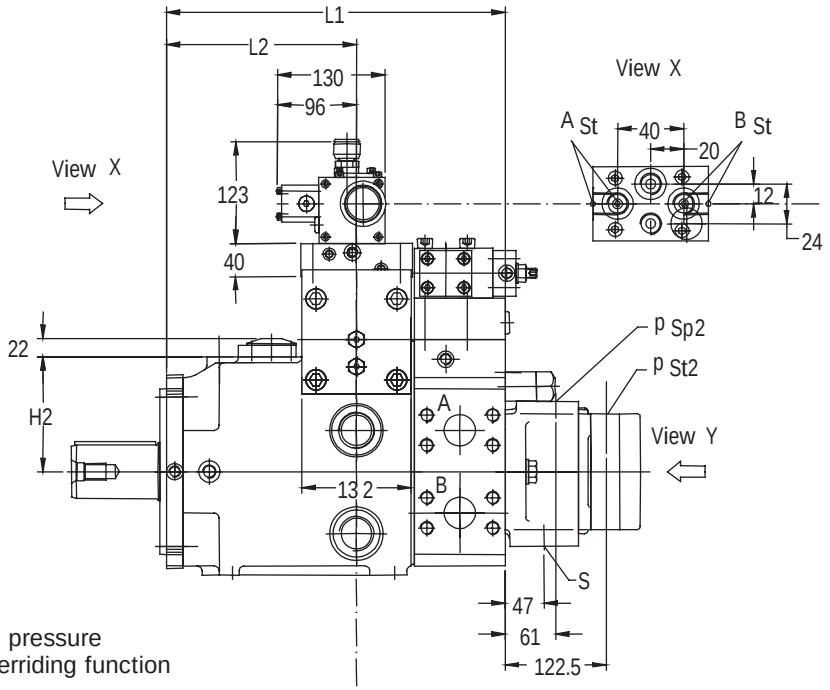

DP - With pressure limiter overriding function

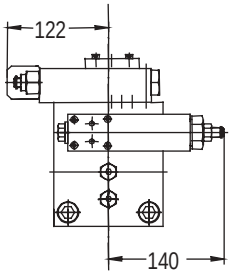

DP - With pressure limiter and power control overriding function

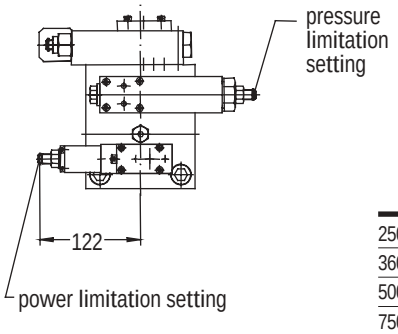

	L1	L2	B1	H1	H2	H3
250	410	230	271	236	135	160
360	426	230	285	236	135	160
500	541,5	300	330	267,5	172	186
750	571	307	372	270	172	188,5

Control Dimensions - TVWS 250/360/500/750 DP Control

Dimensions in mm

DP - With mounting interface CETOP 3

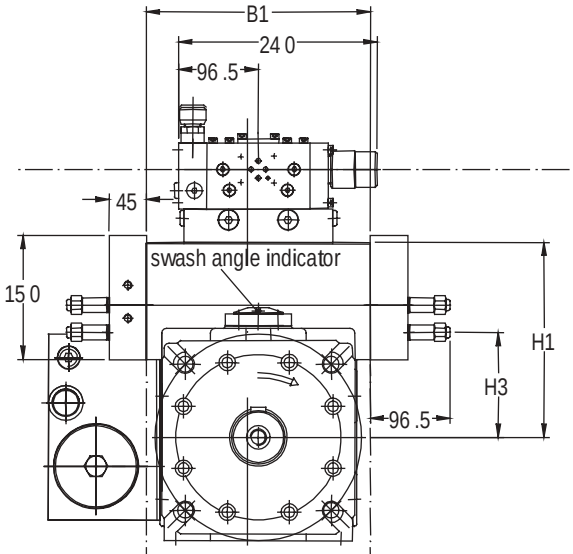

DP - With prop. relief

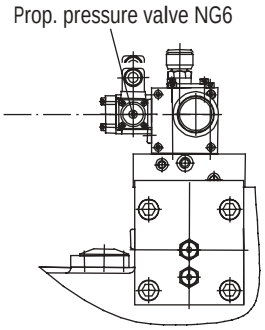

View Y

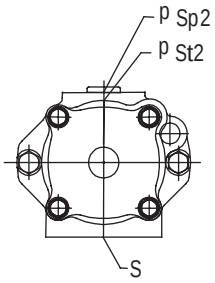

DP - With pressure limiter overriding function

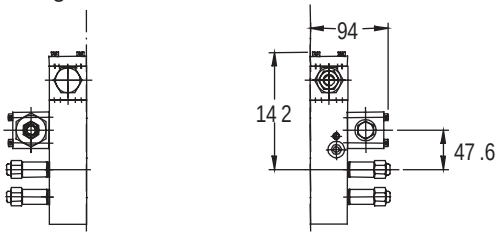

DP - With pressure limiter and power control overriding function

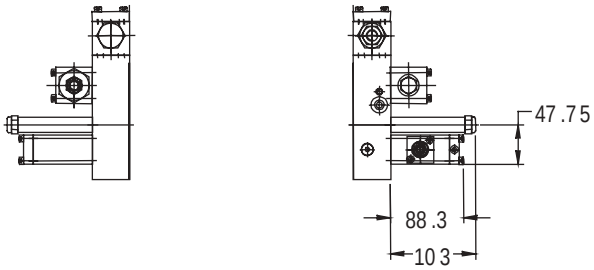

DISPLACEMENT FOR CHARGE PILOT PUMPS (CCM)

Pump Size	Charge Pump	Pilot Pump
250	64	8
360	80	8
500	125	8
750	200	8

Control Dimensions - TVWS 130/180 SM Control

Dimensions in mm

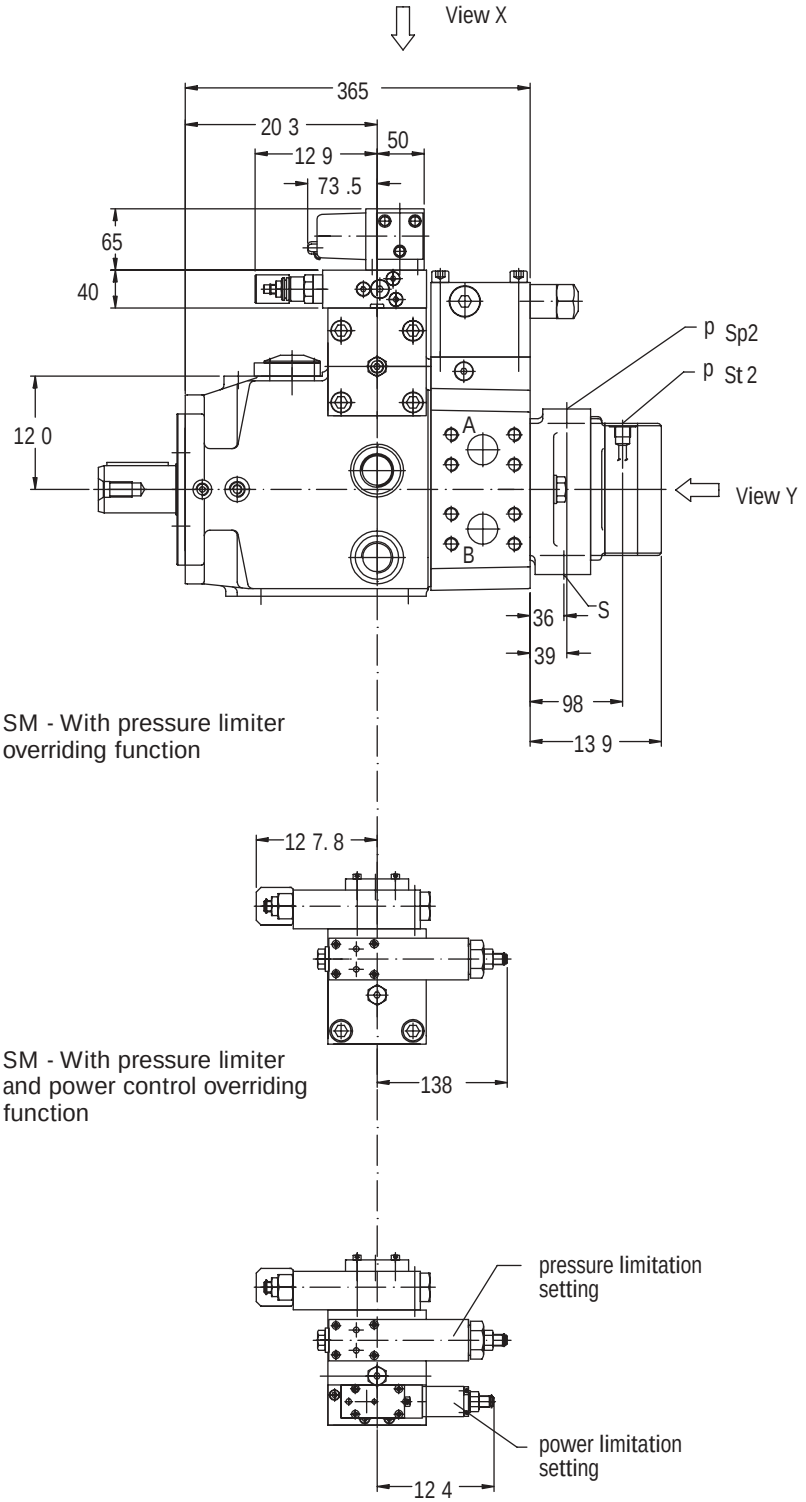

SM - With pressure limiter overriding function

SM - With pressure limiter and power control overriding function

Control Dimensions - TVWS 130/180 SM Control

Dimensions in mm

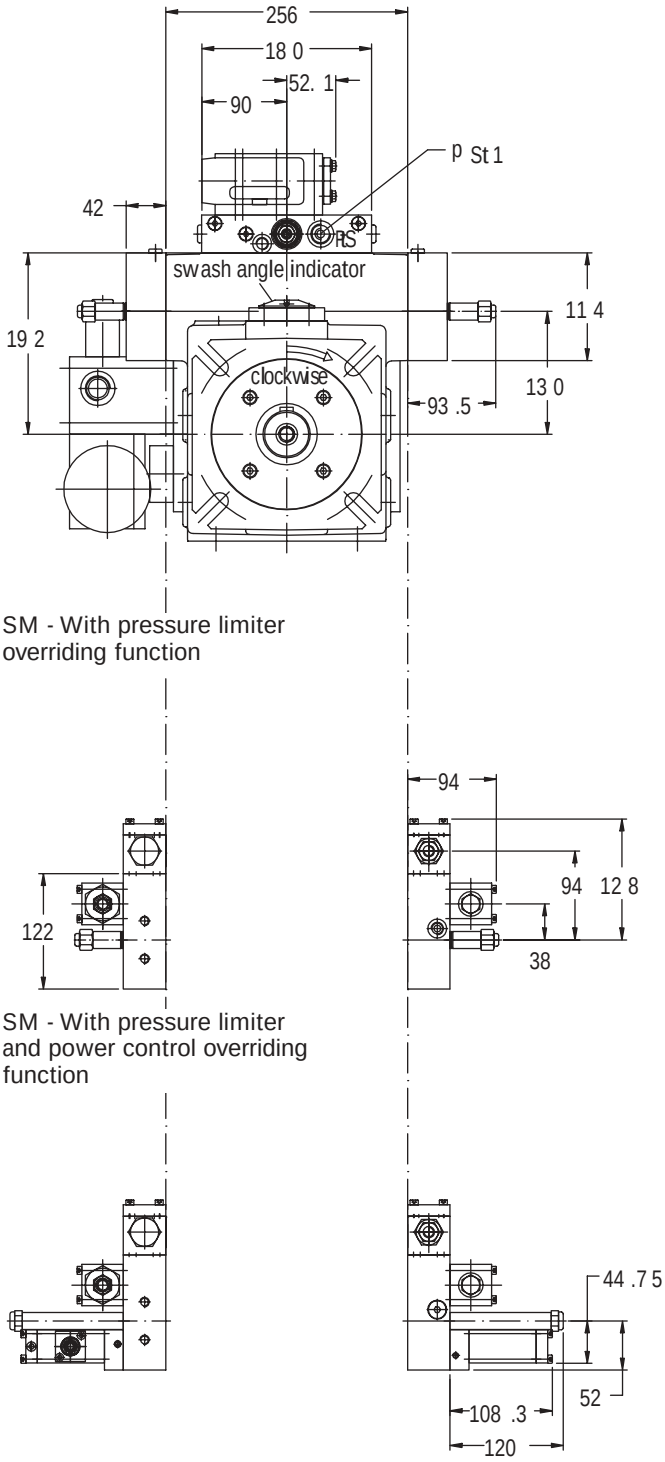

SM - With pressure limiter overriding function

SM - With pressure limiter and power control overriding function

View X

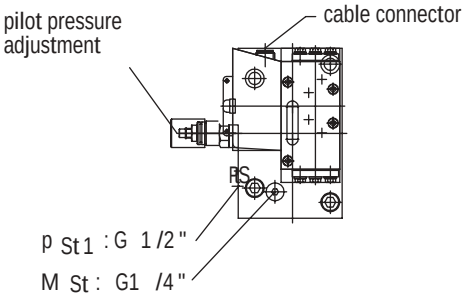

View Y

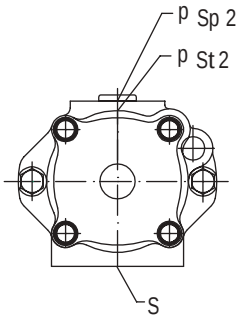

ch arge & pilo t pump 4 0 /8 ccm

Control Dimensions - TVWS 250/360/500/750 SM Control

Dimensions in mm

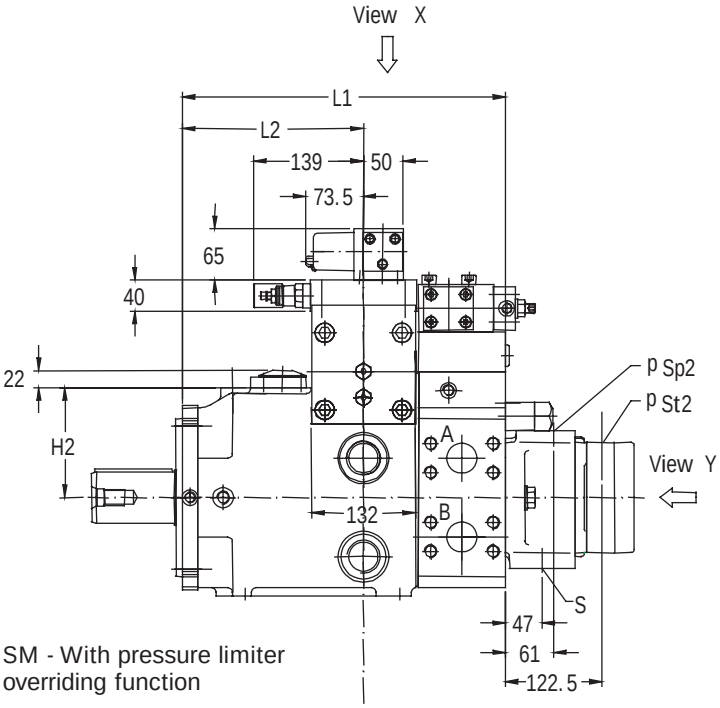

SM - With pressure limiter overriding function

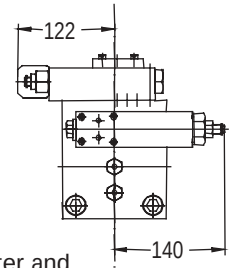

SM - With presure limiter and power control overriding function

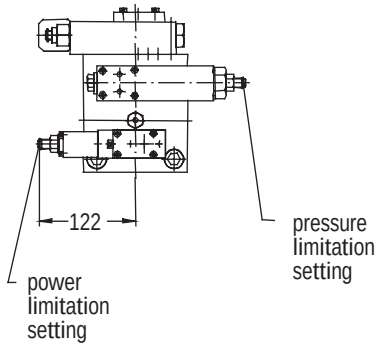

	L1	L2	B1	H1	H2	H3
250	410	230	271	236	135	160
360	426	230	285	236	135	160
500	541,5	300	330	267,5	172	186
750	571	307	372	270	172	188,5

Control Dimensions - TVWS 250/360/500/750 SM Control

Dimensions in mm

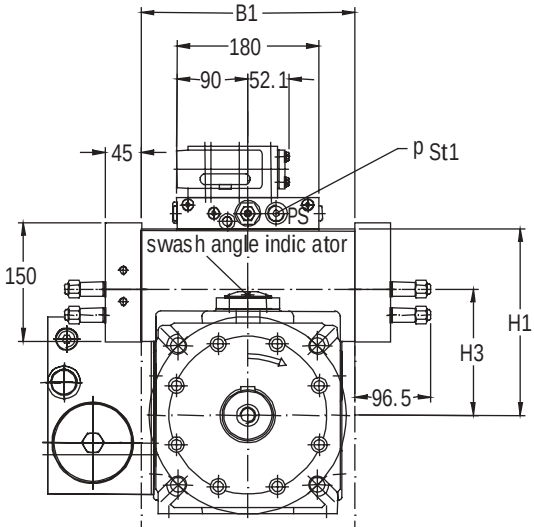

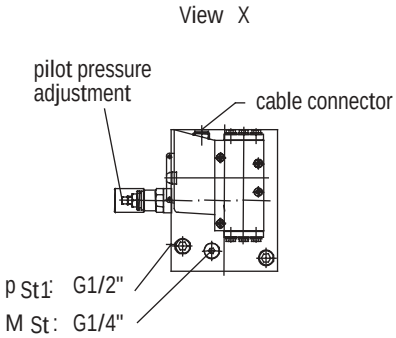

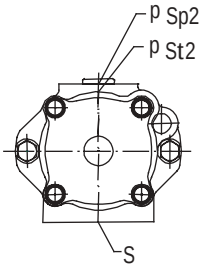

SM - With pressure limiter overriding function

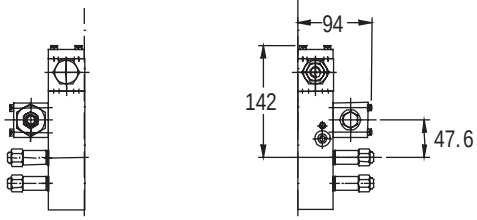

SM - With presure limiter and power control overriding function

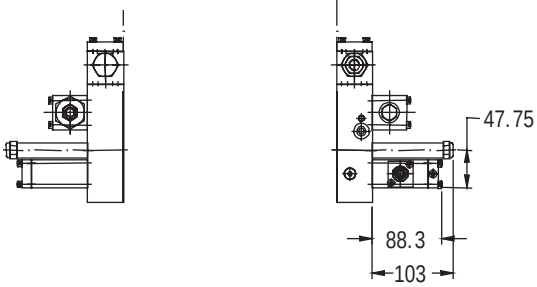

DISPLACEMENT FOR CHARGE PILOT PUMPS (CCM)

Pump Size	Charge Pump	Pilot Pump
250	64	8
360	80	8
500	125	8
750	200	8

Control Dimensions - TVWS Position of Center of Gravity

130/180/250/360/500/750
SP - DR

Dimensions in mm

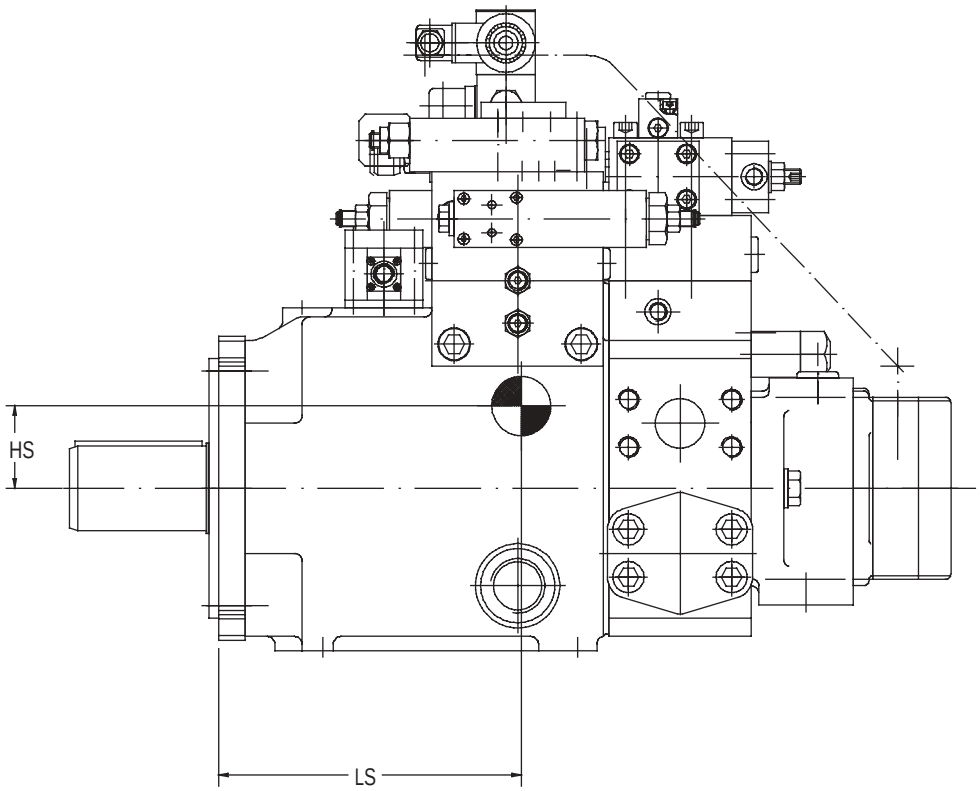

TVW SIZE	WEIGHT KG	LS MM	HS MM
130	160	205	55
180	165	205	55
250	235	233	63
360	240	250	63
500	420	306	55
750	460	318	65

TVW - Swash Angle/ Flow Direction

Dimensions in mm

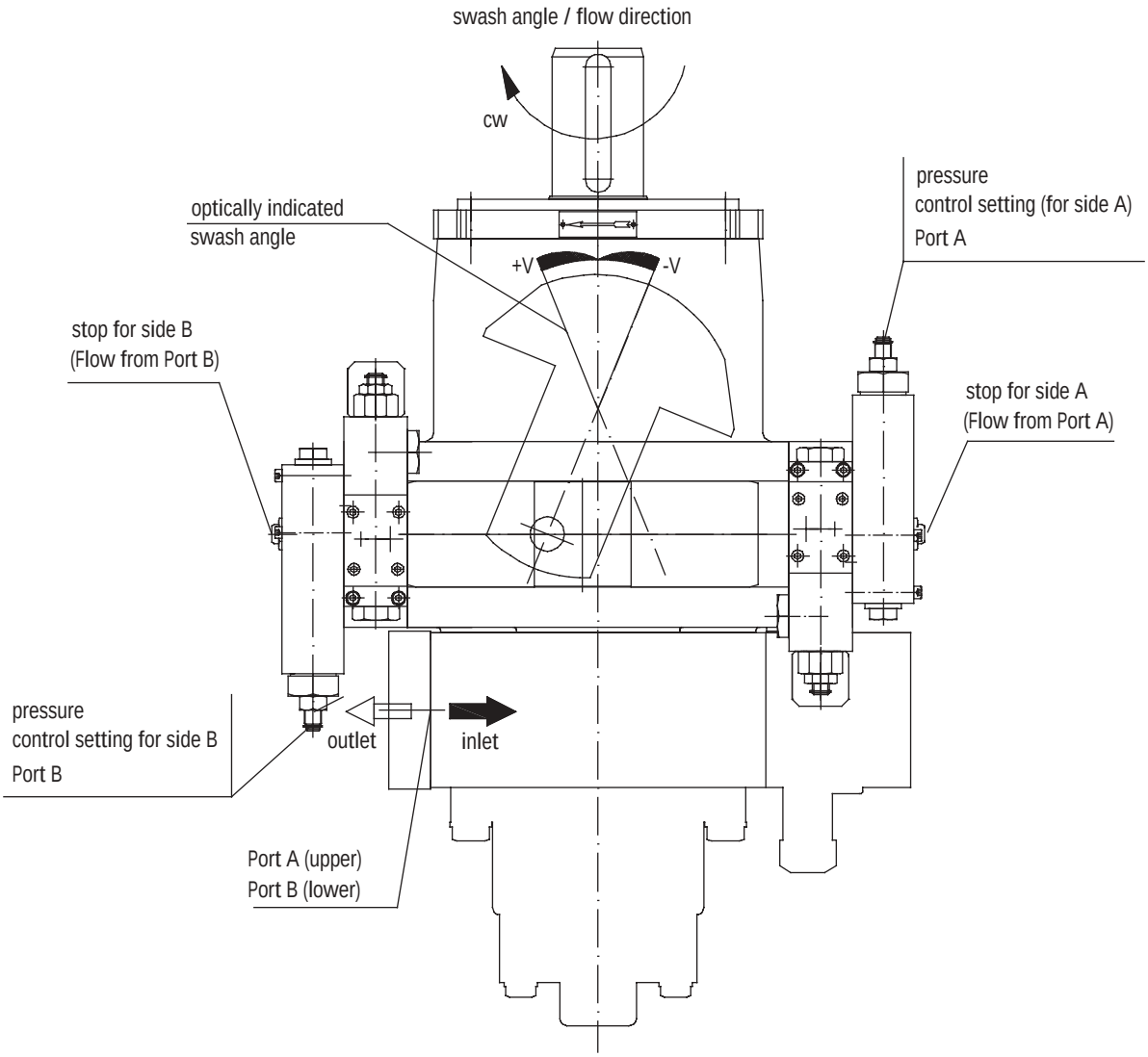

rotation direction: cw, ccw requires aspezial setup for charge and pilot pump

	ACTUATOR PISTON STOP A (+V)	STOP B (-V)
Inlet port	B	A
Outlet port	A	B

Installation position

Installation position is optional however note bearing lubrication with respect to mounting

INSTALLATION POSITION	DRAIN PIPING	INSTALLATION POSITION	DRAIN PIPING
Shaft horizontal	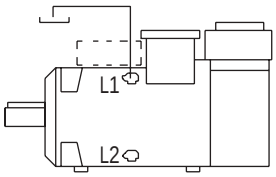	Shaft pointed downwards	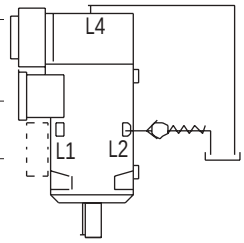
Pump can be rotated freely about the lateral axis		Use ventilation line L_4 Prime main case drain connection L_2 (L_1) with 0,2 bar (2.9 psi)	
Use the highest case drain connection L_1 or L_2			

INSTALLATION POSITION	DRAIN PIPING	INSTALLATION POSITION	DRAIN PIPING
Shaft pointed upwards	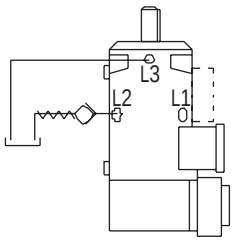	Vertically mounted	Internal connection to be closed with pin no. HC46082101401
Use ventilation line L_3		Internal connection close with plug G 1/8”	
Pre load drain port case drain connection L_2 (L_1) with 0.2 bar (2.9 psi)		Horizontally mounted	
		Internal connection open L_3 plugged	
		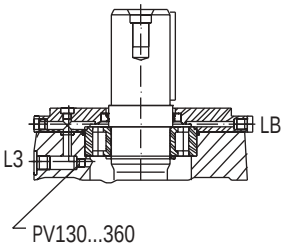	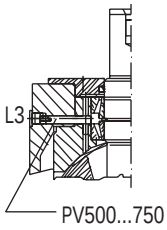

Case Flushing Requirements

A check valve must not be used in the drain pipe. The drain pipe must interminate below the oil level in the reservoir.

For all other conditions with low pressure < 20 bar (<300 psi) and low flow (<10% of Qmax) case flushing is required.

For operation with special fluids HFB and HFC, case flushing is recommended.

Flushing Flow

Flushing flow via the pump case should be >1% of maximum pump flow. Maximum flushing flow depends on case pressure.

Notes:

- All listed ratings are based on the use of a good quality fluid.
- Alternative fluids have a reduced tolerance for contamination over petroleum base fluids. Good filtration is therefore critical.
- The pumps will provide exceptional life when used with a good quality clean fluid at the pump ratings specified for that fluid.

Fluids

Pumps in the catalogue are primarily designed to operate with conventional petroleum based hydraulic oil. Alternative fluids and restrictions:

- Fluid maintenance is critical to the durability of all hydraulic components, and particularly so with hydraulic pumps. This becomes even more of a factor when alternative fluids are used. All types of alternative fluids require extensive maintenance in order to maintain proper levels of water content, acidity, viscosity and contamination.

Fluid Cleanliness

These pumps are rated for anti-wear petroleum fluids with a contamination level of 18/15/13 per ISO 4406. Operation in fluids with levels more contamination than this is not recommended and may reduce the life of the pump components. Fluids other than petroleum, severe service cycles, or temperature extremes are cause for adjustment of these codes. Please contact your Eaton representative for special duty cycle recommendations.

Eaton pumps, as well as any variable displacement piston pumps, will operate with apparent satisfaction in fluids up to the rating specified here. Experience has shown, however, that pump and hydraulic system life is not optimised with high fluid contamination levels (high ISO cleanliness codes).

Proper fluid condition is essential for long and satisfactory life of hydraulic components and systems. Hydraulic fluid must have the correct balance of cleanliness, materials, and additives for protection against wear of inclusion of air.

Essential information on the correct methods for treating hydraulic fluid is included in Eaton publication 561- "Vickers Guide to Systemic Contamination Control"- available from your local Eaton distributor.

In this publication, filtration and cleanliness levels for extending the life of axial piston pumps and other system components are listed. Included is an excellent discussion of the selection of products needed to control fluid condition.

Ordering Procedure

When ordering please specify full model designation of items required; see "Model Codes" section of this catalogue..

Note the following:

- Designation of variable displacement pumps must include the supplementary designation of the required control

FLUIDS

TYPE	CLASSIFICATION	MAX. PRESSURE BAR	MAX. SPEED RPM	RECOMMENDED SEAL MATERIAL	MAX OPERATING TEMPERATURE °C	BEARING LIFE
Oil in Water Emulsion	HFAE	Not Rated				0
Water in oil Emulsion	HFB	250	1800	Fluorocarbon	49	50%
Water Glycol	HFC	250	1800	Fluorocarbon	49	25%
Phosphate Ester	HFDR	350/420	1800	Fluorocarbon	66	100%
Polyol Ester	HFDU	350/420	1800	Fluorocarbon	66	100%

*Refer to the general specifications for the displacement speed limitation

Eaton
14615 Lone Oak Road
Eden Prairie, MN 55344
USA
Tel: 952 937-9800
Fax: 952 974-7722
www.hydraulics.eaton.com

Eaton
20 Rosamond Road
Footscray
Victoria 3011
Australia
Tel: (61) 3 9319 8222
Fax: (61) 3 9318 5714

Eaton
Dr.-Reckeweg-Str. 1
D-76532 Baden-Baden
Germany
Tel: (49) 7221 682-0
Fax: (49) 7221 682-788

© 2003 Eaton Corporation
All rights reserved
Printed in USA
Document No. V-PUPI-TM002-E
February 2003